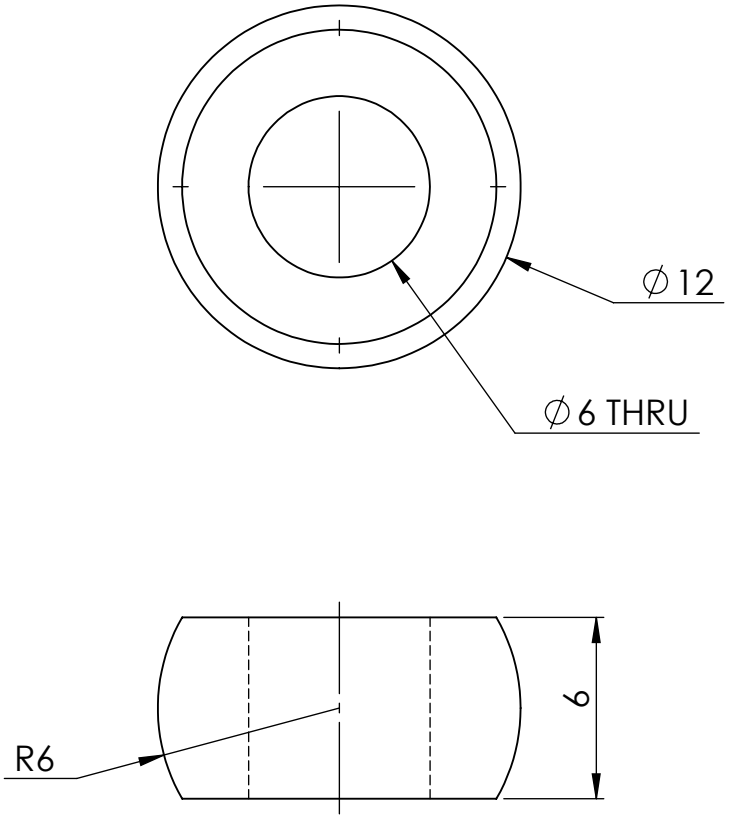

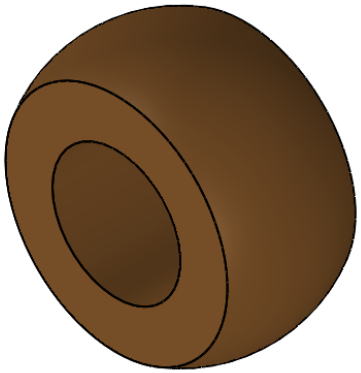

SolidWorks Student Edition.
For Academic Use Only.

PROPRIETARY AND CONFIDENTIAL THE INFORMATION CONTAINED IN THIS DRAWING IS THE SOLE PROPERTY OF UNIVERSITY OF IDAHO, ME DEPARTMENT. ANY REPRODUCTION IN PART OR AS A WHOLE WITHOUT THE WRITTEN PERMISSION OF UNIVERSITY OF IDAHO, ME DEPARTMENT IS PROHIBITED.	DIMENSIONS ARE IN MILLIMETERS THIRD ANGLE PROJECTION MATERIAL: Aluminum Bronze	Fantastic Four: The Barr & Stroud Engine
DEFAULT TOLERANCES: LINEAR: X. ± .25, X.X ± .1, X.XX ± .01, X.XXX ± .002 ANGULAR: X. ± 2, X.X ± 1, X.XX ± 0 30'	DESCRIPTION: Universal Ball CHECKED BY: DATE: DRAWN BY: Brian Zaladonis DATE: 11/26/2011 FILE NAME: Universal Ball (BZ).SLDPRT	**UNIVERSITY OF IDAHO ME DEPARTMENT** PART #: 7-03 QTY: 1 SCALE: 4:1 SHEET: 55 OF 55

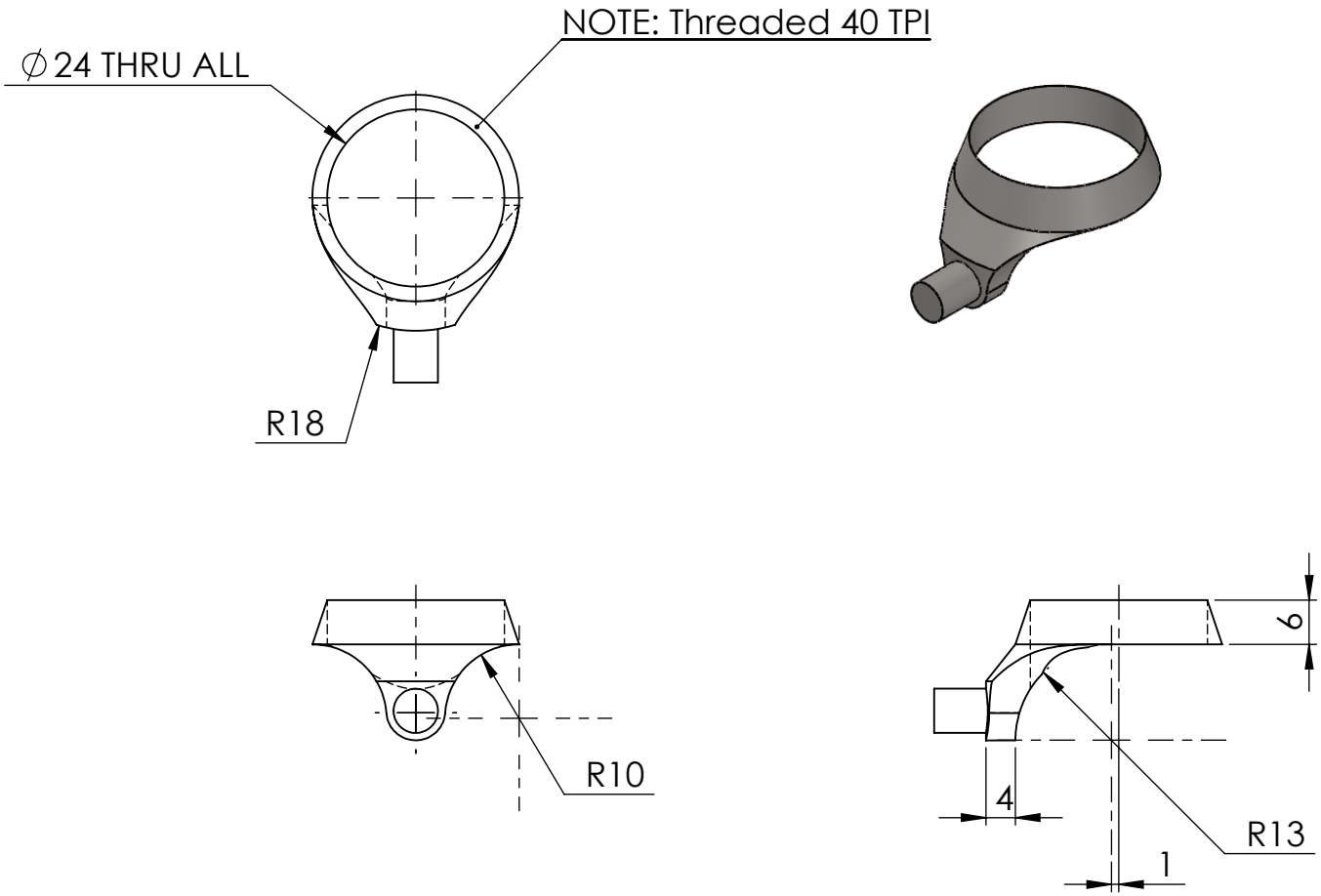

PROPRIETARY AND CONFIDENTIAL
THE INFORMATION CONTAINED IN THIS DRAWING IS THE SOLE PROPERTY OF UNIVERSITY OF IDAHO, ME DEPARTMENT. ANY REPRODUCTION IN PART OR AS A WHOLE WITHOUT THE WRITTEN PERMISSION OF UNIVERSITY OF IDAHO, ME DEPARTMENT IS PROHIBITED.

DIMENSIONS ARE IN MILLIMETERS
THIRD ANGLE PROJECTION

MATERIAL: Alloy Steel

Fantastic Four: The Barr & Stroud Engine

UNIVERSITY OF IDAHO ME DEPARTMENT

DEFAULT TOLERANCES:

LINEAR:	ANGULAR:
X. ± .25	X. ± 2
X.X ± .1	X.X ± 1
X.XX ± .01	X.XX ± 0 30'
X.XXX ± .002	

DESCRIPTION:	Sleeve Crank Pin Collar		
CHECKED BY:		DATE:	
DRAWN BY:	Brian Zaladonis	DATE:	11/26/2011
FILE NAME:	Sleeve Crank Pin Collar(BZ).SLDPRT		

PART #: 7-02	QTY: 1
SCALE: 1:1	SHEET: 54 OF 55

SolidWorks Student Edition.
For Academic Use Only.

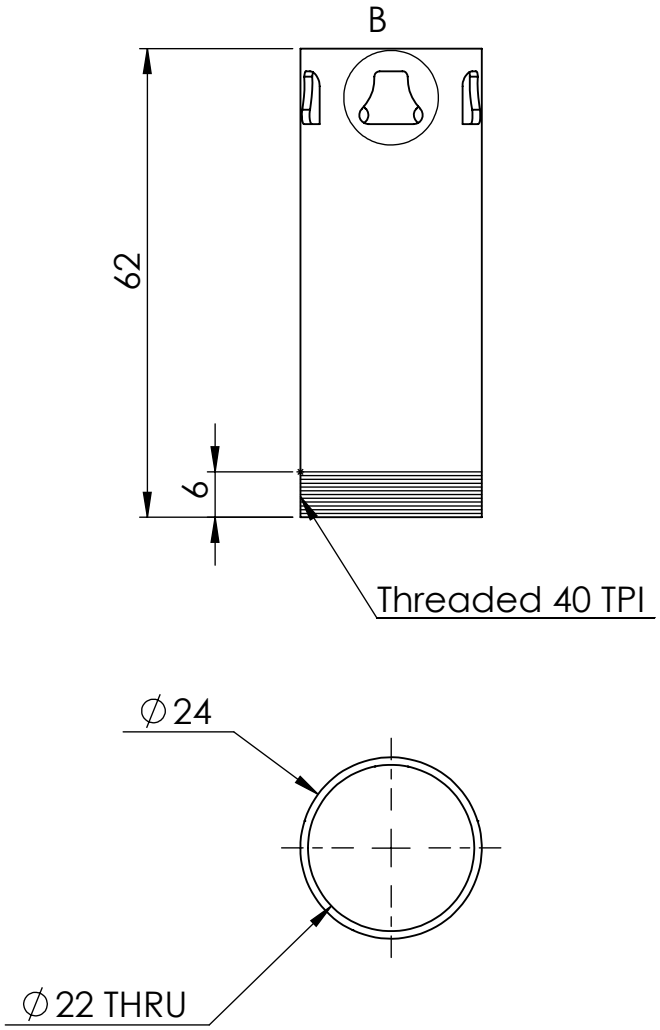

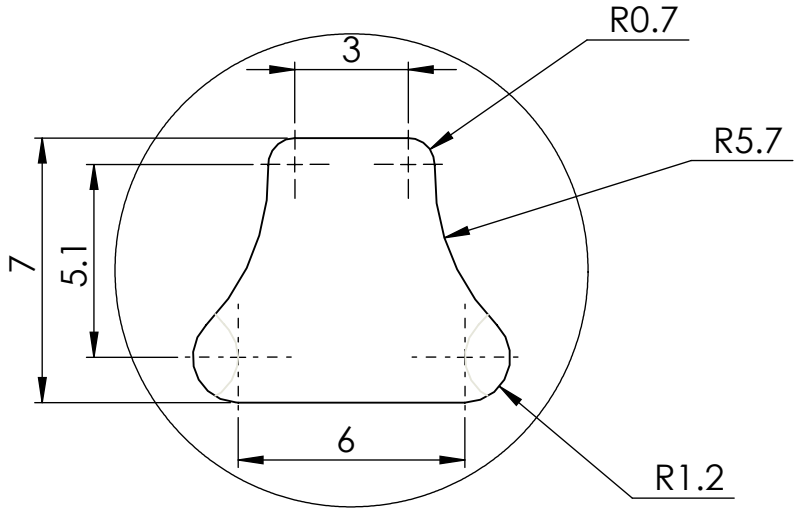

DETAIL B
SCALE 5 : 1

SolidWorks Student Edition.
For Academic Use Only.

PROPRIETARY AND CONFIDENTIAL THE INFORMATION CONTAINED IN THIS DRAWING IS THE SOLE PROPERTY OF UNIVERSITY OF IDAHO, ME DEPARTMENT. ANY REPRODUCTION IN PART OR AS A WHOLE WITHOUT THE WRITTEN PERMISSION OF UNIVERSITY OF IDAHO, ME DEPARTMENT IS PROHIBITED.	DIMENSIONS ARE IN MILLIMETERS THIRD ANGLE PROJECTION		Fantastic Four: The Barr & Stroud Engine
	MATERIAL: Cast Carbon Steel		
DEFAULT TOLERANCES: LINEAR: X.±.25 X.X±.1 X.XX±.01 X.XXX±.002 ANGULAR: X.± 2 X.X± 1 X.XX± 0 30'	DESCRIPTION: Sleeve		**UNIVERSITY OF IDAHO ME DEPARTMENT**
	CHECKED BY:	DATE:	
	DRAWN BY: Aaron Kitchen	DATE: 11/22/2011	PART #: 7-01 QTY: 1
	FILE NAME: Sleeve (AK).SLDPRT		SCALE: 1:1 SHEET: 53 OF 55

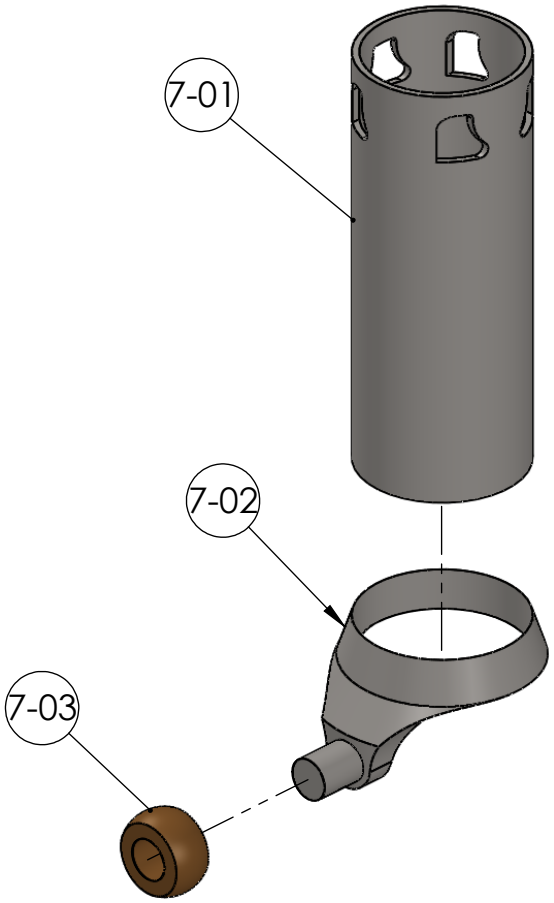

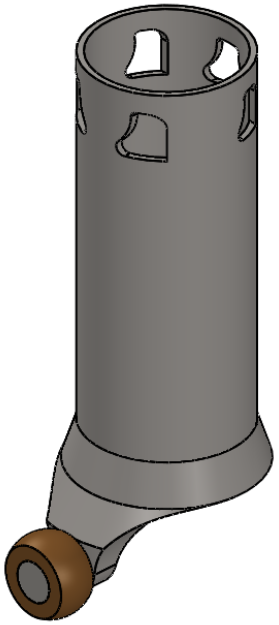

Part #	DESCRIPTION	QTY.	SHEET #
7-02	Sleeve Crank Pin Collar	1	53
7-01	Sleeve	1	54
7-03	Universal Ball	1	55

PROPRIETARY AND CONFIDENTIAL
THE INFORMATION CONTAINED IN THIS DRAWING IS THE SOLE PROPERTY OF UNIVERSITY OF IDAHO, ME DEPARTMENT. ANY REPRODUCTION IN PART OR AS A WHOLE WITHOUT THE WRITTEN PERMISSION OF UNIVERSITY OF IDAHO, ME DEPARTMENT IS PROHIBITED.

DIMENSIONS ARE IN MILLIMETERS
THIRD ANGLE PROJECTION

MATERIAL: Assorted

Fantastic Four: The Barr & Stroud Engine

DEFAULT TOLERANCES:

LINEAR:
X. ± .25
X.X ± .1
X.XX ± .01
X.XXX ± .002

ANGULAR:
X. ± 2
X.X ± 1
X.XX ± 0 30'

DESCRIPTION: Sleeve, Cam Peices Assembly

CHECKED BY:

DATE:

DRAWN BY: Brian Zaladonis

DATE: 11/26/2011

FILE NAME: Sleeve, Cam Peices Assembly exploded

UNIVERSITY OF IDAHO
ME DEPARTMENT

PART #: 7-00

QTY: 1

SCALE: 1:1

SHEET: 52 OF 55

SolidWorks Student Edition.
For Academic Use Only.

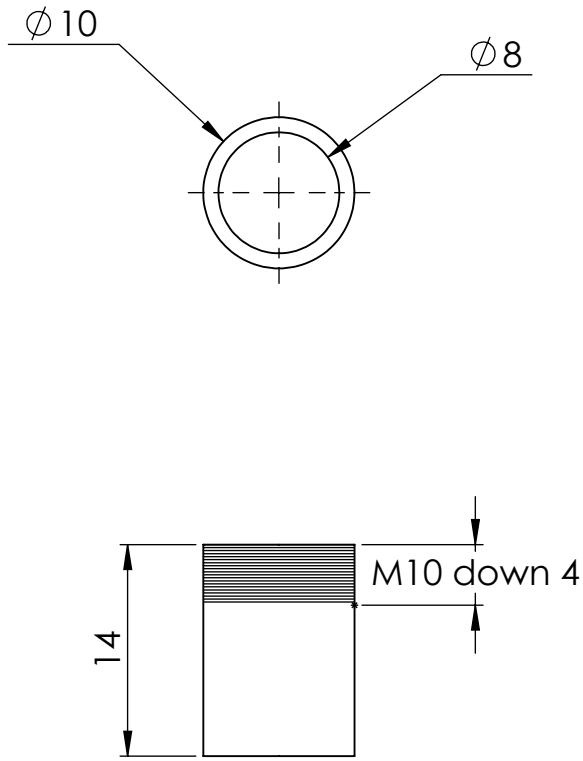

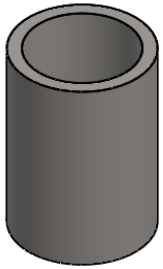

SolidWorks Student Edition.
For Academic Use Only.

PROPRIETARY AND CONFIDENTIAL THE INFORMATION CONTAINED IN THIS DRAWING IS THE SOLE PROPERTY OF UNIVERSITY OF IDAHO, ME DEPARTMENT. ANY REPRODUCTION IN PART OR AS A WHOLE WITHOUT THE WRITTEN PERMISSION OF UNIVERSITY OF IDAHO, ME DEPARTMENT IS PROHIBITED.	DIMENSIONS ARE IN MILLIMETERS THIRD ANGLE PROJECTION MATERIAL: Alloy Steel	Fantastic Four: The Barr & Stroud Engine
DEFAULT TOLERANCES: LINEAR: X.±.25 X.X±.1 X.XX±.01 X.XXX±.002 ANGULAR: X.± 2 X.X± 1 X.XX± 0 30'	DESCRIPTION: Studs Intake & Exhaust CHECKED BY: DATE: DRAWN BY: Aaron Kitchen DATE: 12/1/2011 FILE NAME: Studs_Intake&Exhaust (AK).SLDPRT	**UNIVERSITY OF IDAHO ME DEPARTMENT** PART #: 6-08 QTY: 1 SCALE: 2:1 SHEET: 51 OF 55

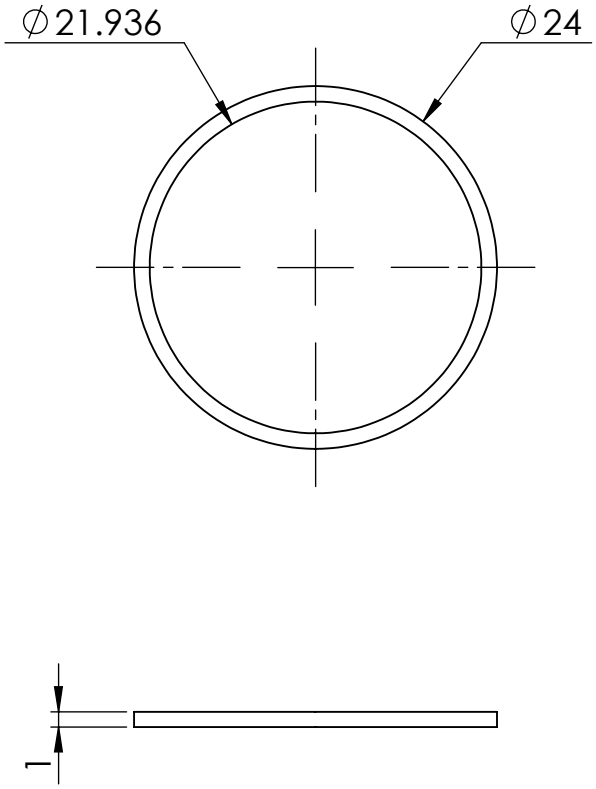

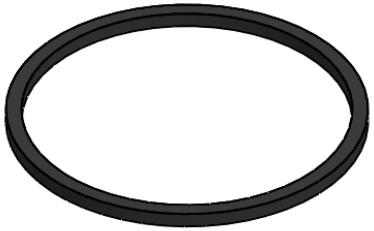

SolidWorks Student Edition.
For Academic Use Only.

PROPRIETARY AND CONFIDENTIAL THE INFORMATION CONTAINED IN THIS DRAWING IS THE SOLE PROPERTY OF UNIVERSITY OF IDAHO, ME DEPARTMENT. ANY REPRODUCTION IN PART OR AS A WHOLE WITHOUT THE WRITTEN PERMISSION OF UNIVERSITY OF IDAHO, ME DEPARTMENT IS PROHIBITED.	DIMENSIONS ARE IN MILLIMETERS THIRD ANGLE PROJECTION MATERIAL: BUTYL	Fantastic Four: The Barr & Stroud Engine
DEFAULT TOLERANCES: LINEAR: X. ± .25, X.X ± .1, X.XX ± .01, X.XXX ± .002 ANGULAR: X. ± 2, X.X ± 1, X.XX ± 0 30'	DESCRIPTION: Piston Ring CHECKED BY: DATE: DRAWN BY: Aaron Kitchen DATE: 12/1/2011 FILE NAME: Ring_Piston&JunkHead (AK).SLDPRT	**UNIVERSITY OF IDAHO ME DEPARTMENT** PART #: 6-07 QTY: 1 SCALE: 2:1 SHEET: 50 OF 55

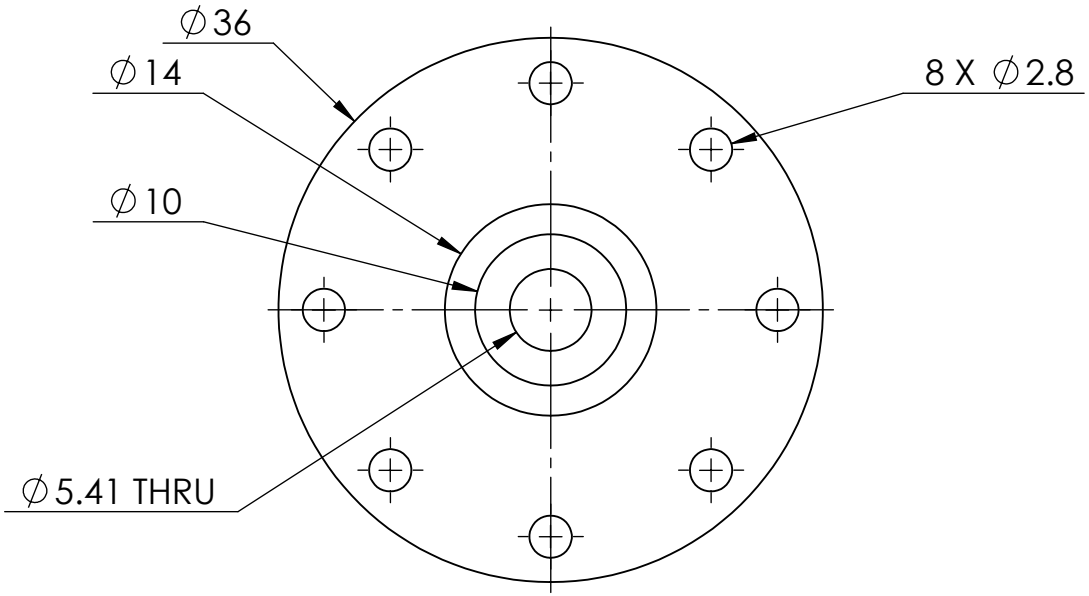

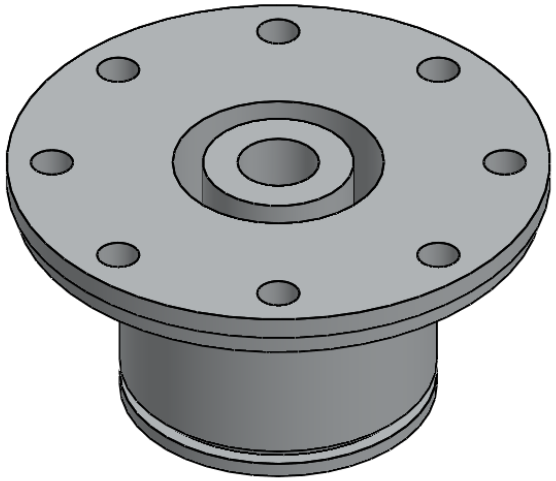

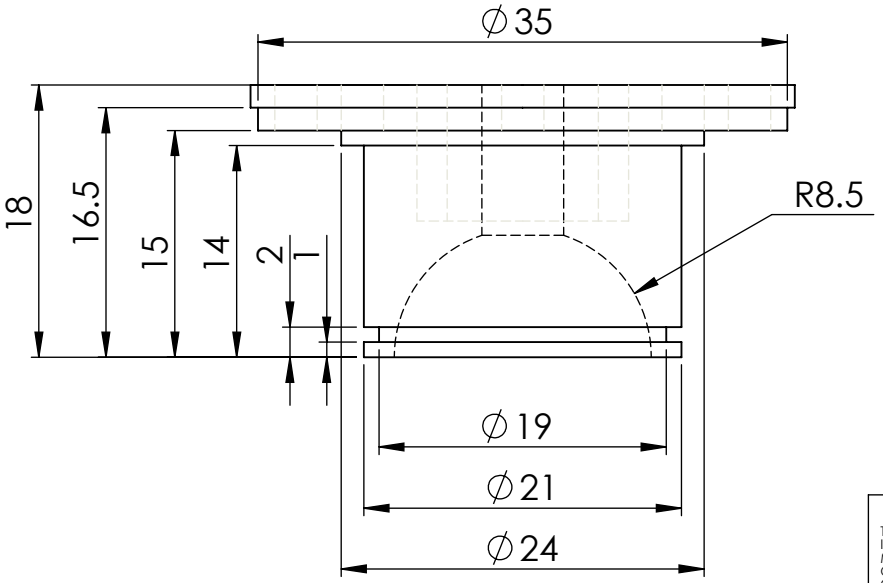

SolidWorks Student Edition.
For Academic Use Only.

PROPRIETARY AND CONFIDENTIAL THE INFORMATION CONTAINED IN THIS DRAWING IS THE SOLE PROPERTY OF UNIVERSITY OF IDAHO, ME DEPARTMENT. ANY REPRODUCTION IN PART OR AS A WHOLE WITHOUT THE WRITTEN PERMISSION OF UNIVERSITY OF IDAHO, ME DEPARTMENT IS PROHIBITED.	DIMENSIONS ARE IN MILLIMETERS THIRD ANGLE PROJECTION MATERIAL: 6061-T6 (SS)	Fantastic Four: The Barr & Stroud Engine
DEFAULT TOLERANCES: LINEAR: X. ± .25, X.X ± .1, X.XX ± .01, X.XXX ± .002 ANGULAR: X. ± 2, X.X ± 1, X.XX ± 0 30'	DESCRIPTION: Junk Head CHECKED BY: DATE: DRAWN BY: Aaron Kitchen DATE: 12/1/2011 FILE NAME: Junk Head (AK).SLDPRT	**UNIVERSITY OF IDAHO ME DEPARTMENT** PART #: 6-06 QTY: 1 SCALE: 2:1 SHEET: 49 OF 55

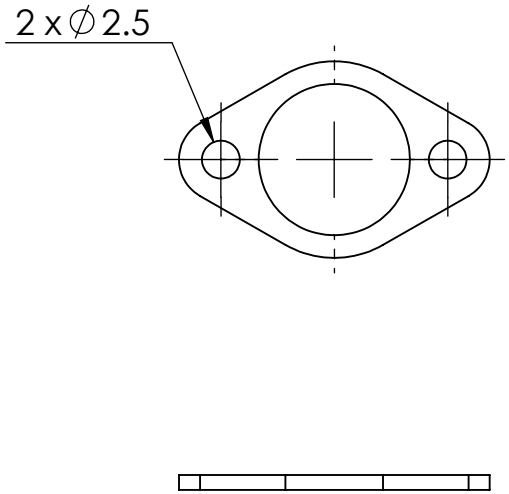

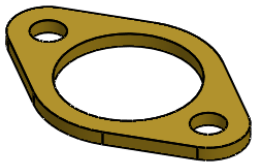

NOTE: All dimensions not noted are the same as the Intake Flange.

SolidWorks Student Edition.
For Academic Use Only.

PROPRIETARY AND CONFIDENTIAL
THE INFORMATION CONTAINED IN THIS DRAWING IS THE SOLE PROPERTY OF UNIVERSITY OF IDAHO, ME DEPARTMENT. ANY REPRODUCTION IN PART OR AS A WHOLE WITHOUT THE WRITTEN PERMISSION OF UNIVERSITY OF IDAHO, ME DEPARTMENT IS PROHIBITED.

DIMENSIONS ARE IN MILLIMETERS
THIRD ANGLE PROJECTION

MATERIAL: Brass

Fantastic Four: The Barr & Stroud Engine

UNIVERSITY OF IDAHO ME DEPARTMENT

DEFAULT TOLERANCES:

LINEAR:	ANGULAR:
X. ± .25	X. ± 2
X.X ± .1	X.X ± 1
X.XX ± .01	X.XX ± 0 30'
X.XXX ± .002	

DESCRIPTION:	Exhaust Flange		
CHECKED BY:		DATE:	
DRAWN BY:	Aaron Kitchen	DATE:	12/8/2011
FILE NAME:	Flanges_Intake&Exhaust_2.55 (AK).SLDPRT		

PART #:	6-05
QTY:	1
SCALE:	2:1
SHEET:	48 OF 55

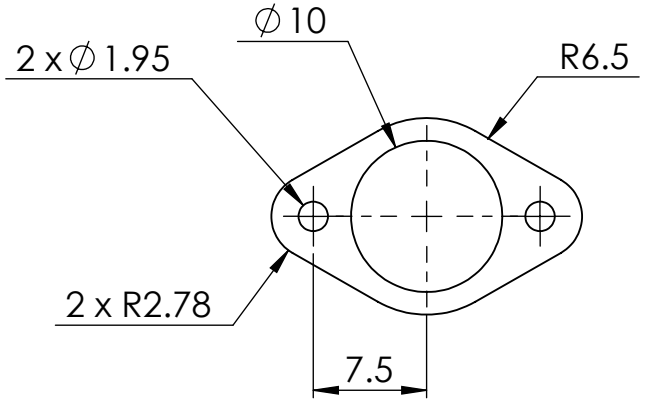

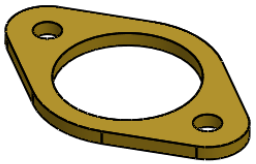

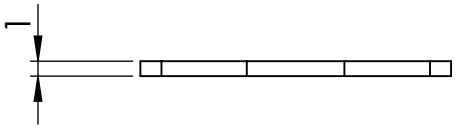

PROPRIETARY AND CONFIDENTIAL
THE INFORMATION CONTAINED IN THIS DRAWING IS THE SOLE PROPERTY OF UNIVERSITY OF IDAHO, ME DEPARTMENT. ANY REPRODUCTION IN PART OR AS A WHOLE WITHOUT THE WRITTEN PERMISSION OF UNIVERSITY OF IDAHO, ME DEPARTMENT IS PROHIBITED.

DIMENSIONS ARE IN MILLIMETERS
THIRD ANGLE PROJECTION

MATERIAL: Brass

Fantastic Four: The Barr & Stroud Engine

UNIVERSITY OF IDAHO ME DEPARTMENT

DEFAULT TOLERANCES:

LINEAR:	ANGULAR:
X. ± .25	X. ± 2
X.X ± .1	X.X ± 1
X.XX ± .01	X.XX ± 0 30'
X.XXX ± .002	

DESCRIPTION: Intake Flange			
CHECKED BY:	DATE:		
DRAWN BY: Aaron Kitchen	DATE: 12/8/2011	PART #: 6-04	QTY: 1
FILE NAME: Flanges_Intake&Exhaust_1.95 (AK).SLDPRT		SCALE: 2:1	SHEET: 47 OF 55

SolidWorks Student Edition.
For Academic Use Only.

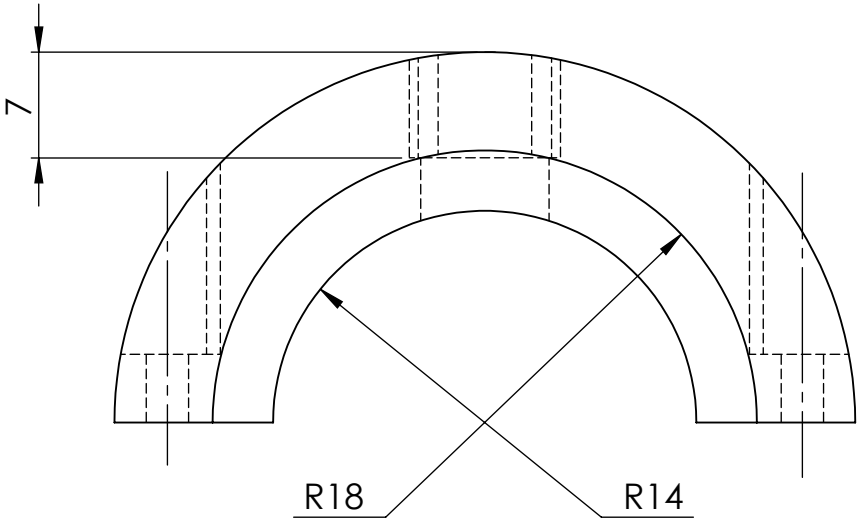

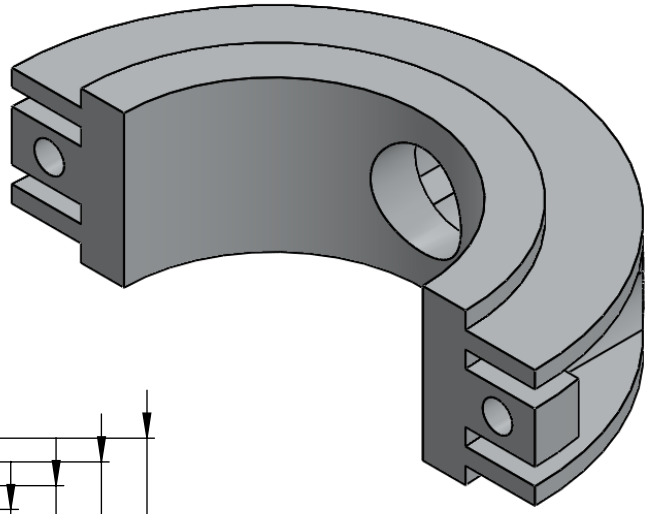

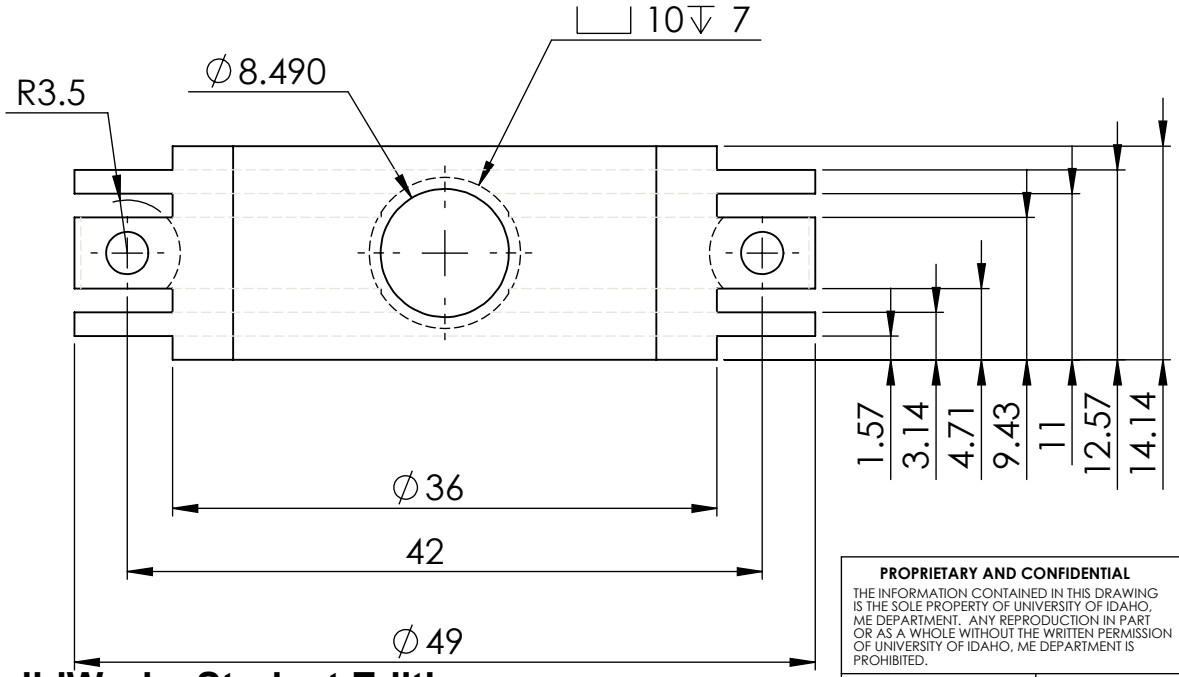

SolidWorks Student Edition.
For Academic Use Only.

PROPRIETARY AND CONFIDENTIAL
THE INFORMATION CONTAINED IN THIS DRAWING IS THE SOLE PROPERTY OF UNIVERSITY OF IDAHO, ME DEPARTMENT. ANY REPRODUCTION IN PART OR AS A WHOLE WITHOUT THE WRITTEN PERMISSION OF UNIVERSITY OF IDAHO, ME DEPARTMENT IS PROHIBITED.

DIMENSIONS ARE IN MILLIMETERS
THIRD ANGLE PROJECTION

MATERIAL: 6061-T6 (SS)

Fantastic Four: The Barr & Stroud Engine

UNIVERSITY OF IDAHO
ME DEPARTMENT

DEFAULT TOLERANCES:

LINEAR:	ANGULAR:
X. ± .25	X. ± 2
X.X ± .1	X.X ± 1
X.XX ± .01	X.XX ± 0 30'
X.XXX ± .002	

DESCRIPTION:	Intake Manifold		
CHECKED BY:		DATE:	
DRAWN BY:	Aaron Kitchen	DATE:	12/8/2011
FILE NAME:	Intake Manifold.SLDPRT		

PART #:	6-03	QTY:	1
SCALE:	2:1	SHEET:	46 OF 55

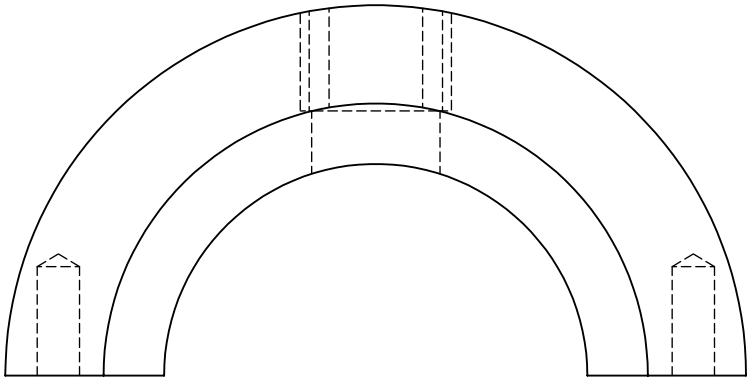

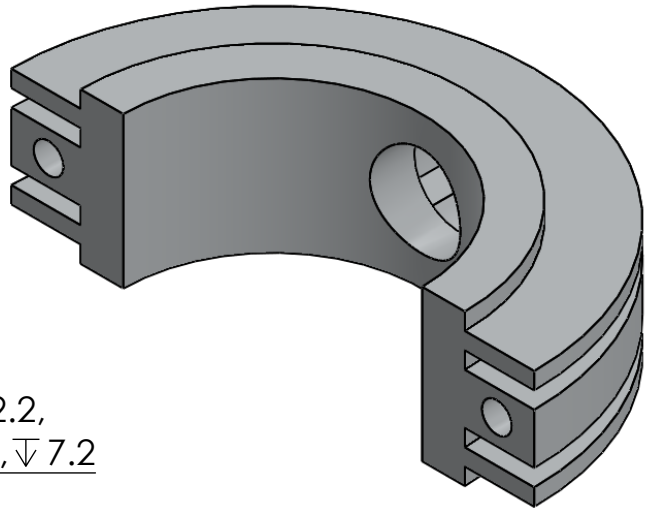

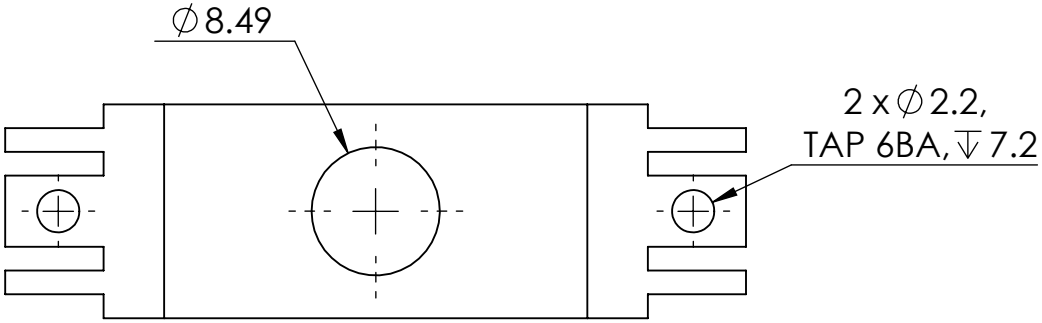

NOTE: All dimensions not noted are the same as the Intake Manifold.

SolidWorks Student Edition.
For Academic Use Only.

PROPRIETARY AND CONFIDENTIAL
THE INFORMATION CONTAINED IN THIS DRAWING IS THE SOLE PROPERTY OF UNIVERSITY OF IDAHO, ME DEPARTMENT. ANY REPRODUCTION IN PART OR AS A WHOLE WITHOUT THE WRITTEN PERMISSION OF UNIVERSITY OF IDAHO, ME DEPARTMENT IS PROHIBITED.

DIMENSIONS ARE IN MILLIMETERS
THIRD ANGLE PROJECTION

MATERIAL: 6061-T6 (SS)

Fantastic Four: The Barr & Stroud Engine

DEFAULT TOLERANCES:

LINEAR:	ANGULAR:
X. ± .25	X. ± 2
X.X ± .1	X.X ± 1
X.XX ± .01	X.XX ± 0 30'
X.XXX ± .002	

DESCRIPTION:	Exhaust Manifold		
CHECKED BY:		DATE:	
DRAWN BY:	Aaron Kitchen	DATE:	12/8/2011
FILE NAME:	Exhaust Manifold.SLDPRT		

UNIVERSITY OF IDAHO
ME DEPARTMENT

PART #:	6-02	QTY:	1
SCALE:	1:2	SHEET:	45 OF 55

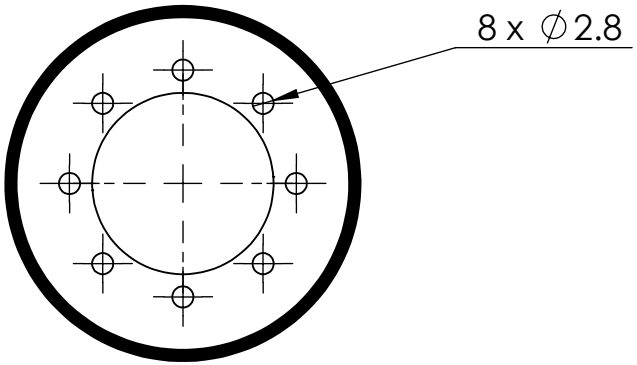

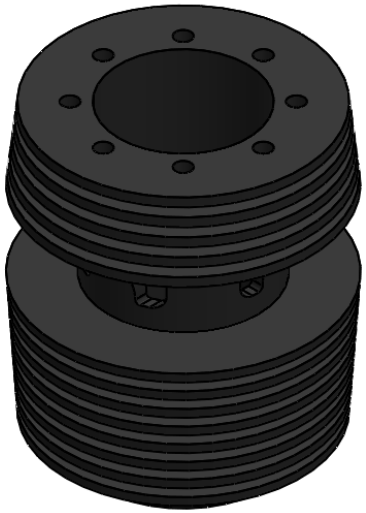

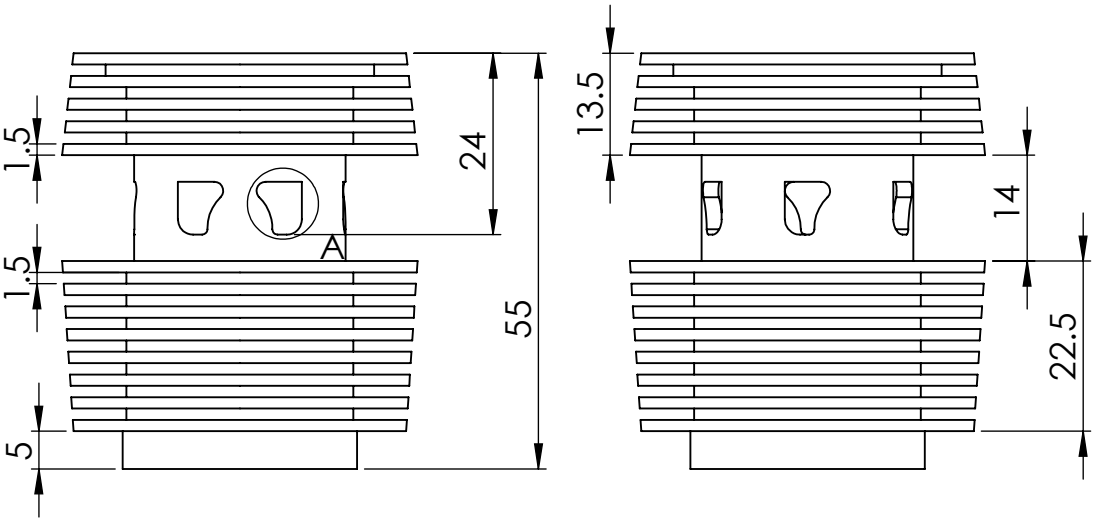

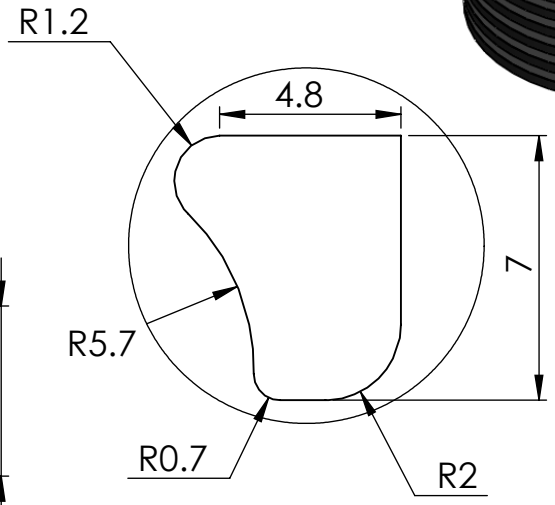

DETAIL A
SCALE 5 : 1

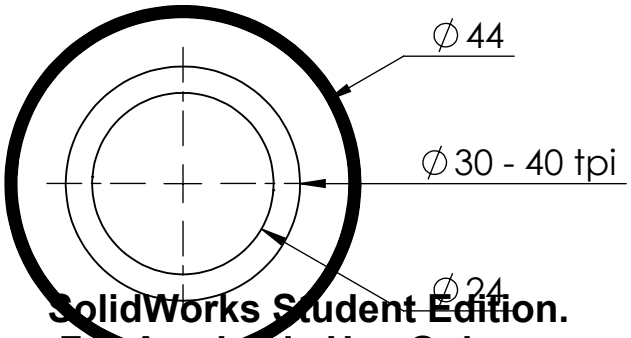

SolidWorks Student Edition.
For Academic Use Only.

PROPRIETARY AND CONFIDENTIAL THE INFORMATION CONTAINED IN THIS DRAWING IS THE SOLE PROPERTY OF UNIVERSITY OF IDAHO, ME DEPARTMENT. ANY REPRODUCTION IN PART OR AS A WHOLE WITHOUT THE WRITTEN PERMISSION OF UNIVERSITY OF IDAHO, ME DEPARTMENT IS PROHIBITED.	DIMENSIONS ARE IN MILLIMETERS THIRD ANGLE PROJECTION MATERIAL: Gray Cast Iron	Fantastic Four: The Barr & Stroud Engine
DEFAULT TOLERANCES: LINEAR: X.±.25, X.X±.1, X.XX±.01, X.XXX±.002; ANGULAR: X.± 2, X.X± 1, X.XX± 0 30'	DESCRIPTION: Cylinder CHECKED BY: DATE: DRAWN BY: Aaron Kitchen DATE: 12/8/2011 FILE NAME: Cylinder (AK).SLDPRT	**UNIVERSITY OF IDAHO ME DEPARTMENT** PART #: 6-01 QTY: 1 SCALE: 1:1 SHEET: 44 OF 55

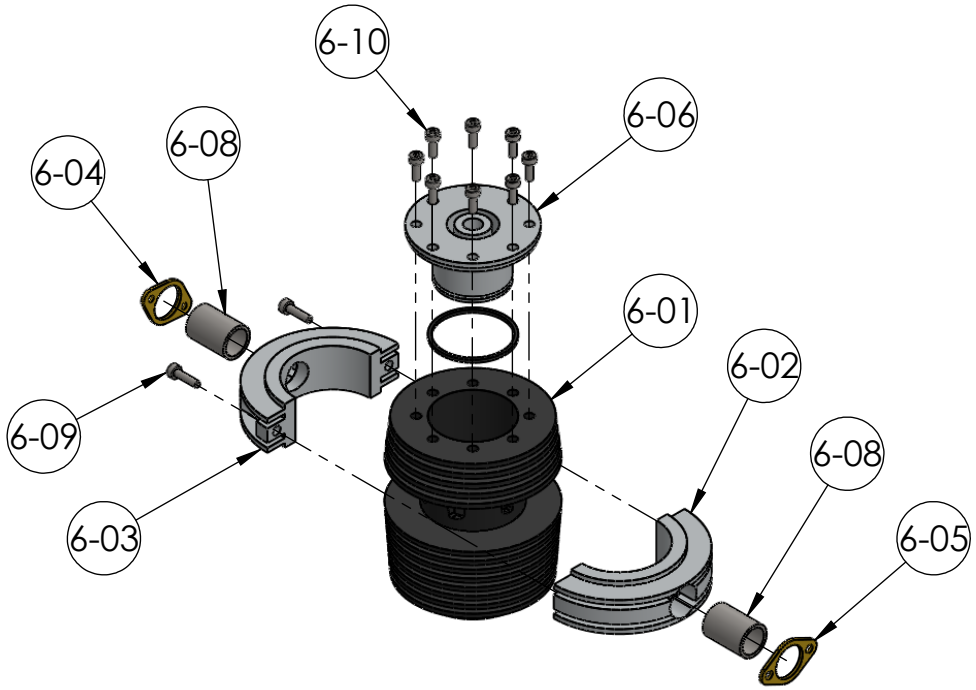

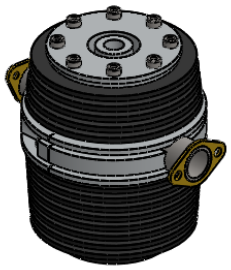

Part #	DESCRIPTION	QTY.	Sheet #
6-01	Cylinder	1	44
6-02	Exhaust Manifold	1	45
6-03	Intake Manifold	1	46
6-04	Intake Flange	1	47
6-05	Exhaust Flange	1	48
6-06	Junk Head	1	49
6-07	Piston Ring	1	50
6-08	Studs Intake & Exhaust	2	51
6-09	2 x 0.4 x 8 Hex	2	-
6-10	2 x 0.4 x 6 Hex	8	-

PROPRIETARY AND CONFIDENTIAL
THE INFORMATION CONTAINED IN THIS DRAWING IS THE SOLE PROPERTY OF UNIVERSITY OF IDAHO, ME DEPARTMENT. ANY REPRODUCTION IN PART OR AS A WHOLE WITHOUT THE WRITTEN PERMISSION OF UNIVERSITY OF IDAHO, ME DEPARTMENT IS PROHIBITED.

DIMENSIONS ARE IN MILLIMETERS
THIRD ANGLE PROJECTION

MATERIAL: Assorted

Fantastic Four: The Barr & Stroud Engine

DEFAULT TOLERANCES:

LINEAR:
X. ± .25
X.X ± .1
X.XX ± .01
X.XXX ± .002

ANGULAR:
X. ± 2
X.X ± 1
X.XX ± 0 30'

DESCRIPTION: Cylinder Manifolds Assembly

CHECKED BY:

DATE:

DRAWN BY: Aaron Kitchen

DATE: 12/8/2011

FILE NAME: (6) Cylinder_Manifolds_Assembly.SLDPRT

UNIVERSITY OF IDAHO
ME DEPARTMENT

PART #: 6-00

QTY: 1

SCALE: 1:2

SHEET: 43 OF 55

SolidWorks Student Edition.
For Academic Use Only.

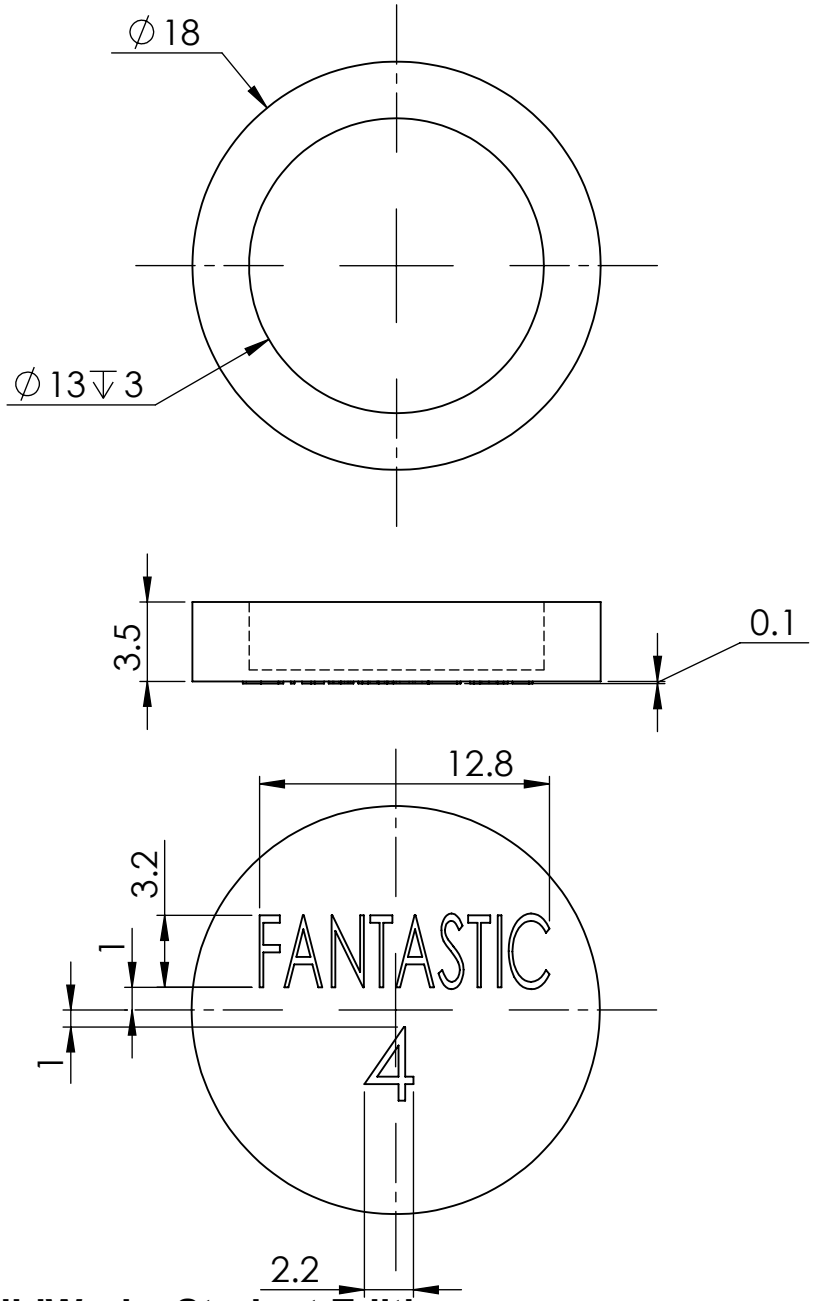

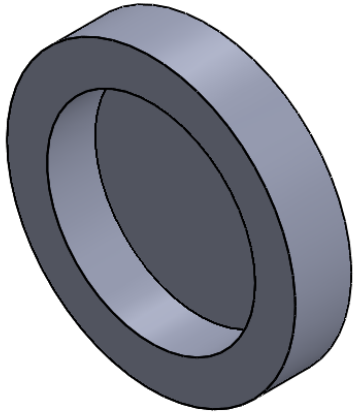

SolidWorks Student Edition.
For Academic Use Only.

PROPRIETARY AND CONFIDENTIAL
THE INFORMATION CONTAINED IN THIS DRAWING IS THE SOLE PROPERTY OF UNIVERSITY OF IDAHO, ME DEPARTMENT. ANY REPRODUCTION IN PART OR AS A WHOLE WITHOUT THE WRITTEN PERMISSION OF UNIVERSITY OF IDAHO, ME DEPARTMENT IS PROHIBITED.

DIMENSIONS ARE IN MILLIMETERS
THIRD ANGLE PROJECTION

MATERIAL: 2618-T61 (SS)

Fantastic Four: The Barr & Stroud Engine

UNIVERSITY OF IDAHO
ME DEPARTMENT

DEFAULT TOLERANCES:

LINEAR:	ANGULAR:
X. ± .25	X. ± 2
X.X ± .1	X.X ± 1
X.XX ± .01	X.XX ± 0 30'
X.XXX ± .002	

DESCRIPTION:	Name Plate		
CHECKED BY:		DATE:	
DRAWN BY:	Richard Broaddus	DATE:	12/8/2011
FILE NAME:	Nameplate (RB).SLDPRT		

PART #:	5-05	QTY:	1
SCALE:	3:1	SHEET:	42 OF 55

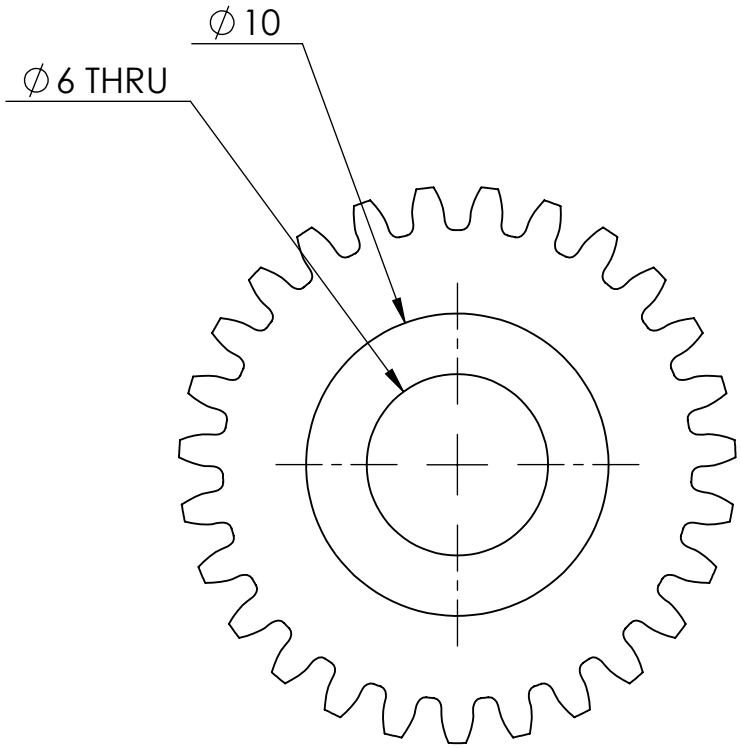

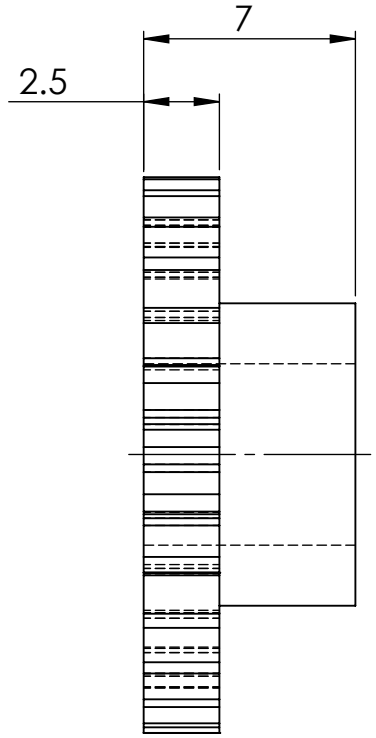

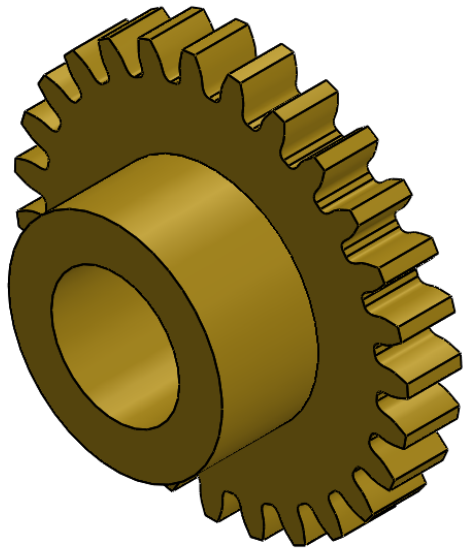

NOTE: DP=40 27-T
PCD: 17.145 mm OD: 18.415 mm

SolidWorks Student Edition.
For Academic Use Only.

PROPRIETARY AND CONFIDENTIAL
THE INFORMATION CONTAINED IN THIS DRAWING IS THE SOLE PROPERTY OF UNIVERSITY OF IDAHO, ME DEPARTMENT. ANY REPRODUCTION IN PART OR AS A WHOLE WITHOUT THE WRITTEN PERMISSION OF UNIVERSITY OF IDAHO, ME DEPARTMENT IS PROHIBITED.

DIMENSIONS ARE IN MILLIMETERS
THIRD ANGLE PROJECTION

MATERIAL: Brass

Fantastic Four: The Barr & Stroud Engine

DEFAULT TOLERANCES:

LINEAR:	ANGULAR:
X. ± .25	X. ± 2
X.X ± .1	X.X ± 1
X.XX ± .01	X.XX ± 0 30'
X.XXX ± .002	

DESCRIPTION:	Magneto Gear		
CHECKED BY:		DATE:	
DRAWN BY:	Phillip Spinden	DATE:	12/1/2011
FILE NAME:	Magneto Gear (PS).SLDPRT		

UNIVERSITY OF IDAHO
ME DEPARTMENT

PART #:	5-04	QTY:	1
SCALE:	4:1	SHEET:	41 OF 55

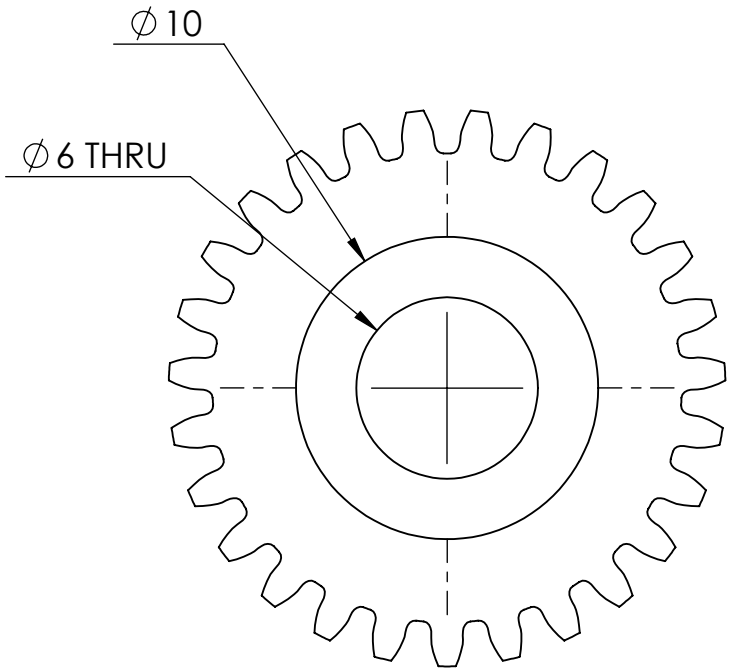

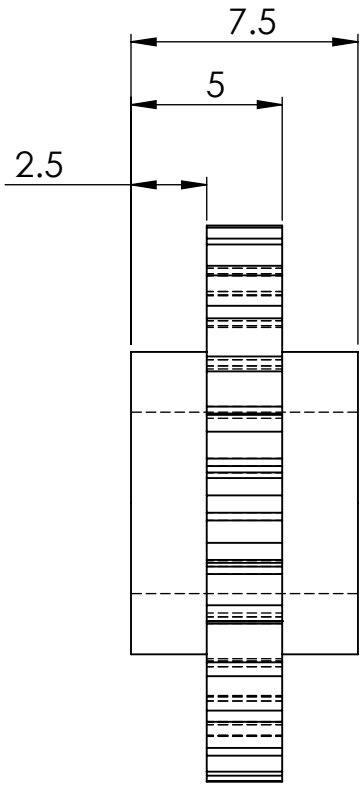

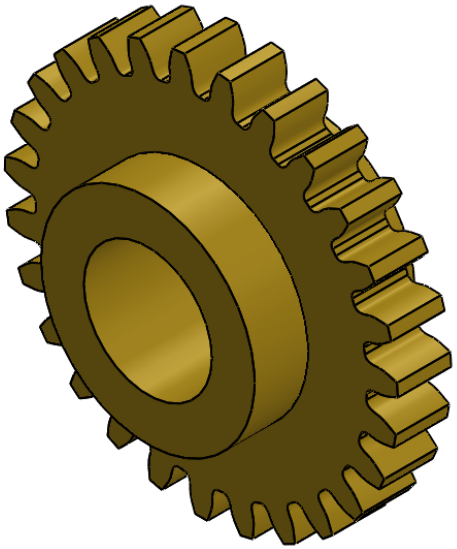

NOTE: DP=40 27-T
PCD: 17.145 mm OD: 18.415 mm

SolidWorks Student Edition.
For Academic Use Only.

PROPRIETARY AND CONFIDENTIAL THE INFORMATION CONTAINED IN THIS DRAWING IS THE SOLE PROPERTY OF UNIVERSITY OF IDAHO, ME DEPARTMENT. ANY REPRODUCTION IN PART OR AS A WHOLE WITHOUT THE WRITTEN PERMISSION OF UNIVERSITY OF IDAHO, ME DEPARTMENT IS PROHIBITED.	DIMENSIONS ARE IN MILLIMETERS THIRD ANGLE PROJECTION		Fantastic Four: The Barr & Stroud Engine
	MATERIAL: Brass		
DEFAULT TOLERANCES: LINEAR: X.±.25 X.X±.1 X.XX±.01 X.XXX±.002 ANGULAR: X.± 2 X.X± 1 X.XX± 0 30'	DESCRIPTION: Idler Gear		**UNIVERSITY OF IDAHO ME DEPARTMENT**
	CHECKED BY:	DATE:	
	DRAWN BY: Phillip Spinden	DATE: 12/6/2011	PART #: 5-03 QTY: 1
	FILE NAME: Idler Gear (PS).SLDPRT		SCALE: 4:1 SHEET: 40 OF 55

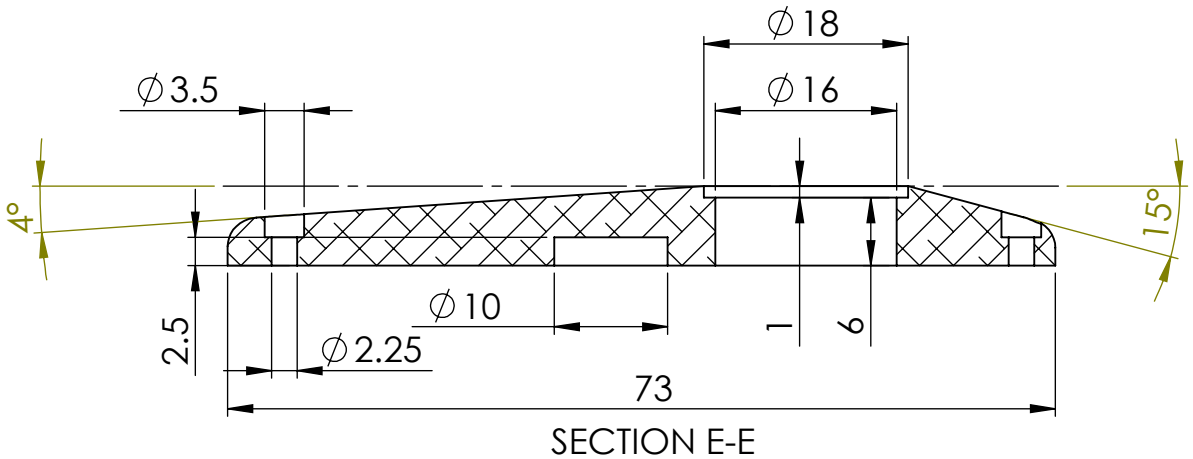

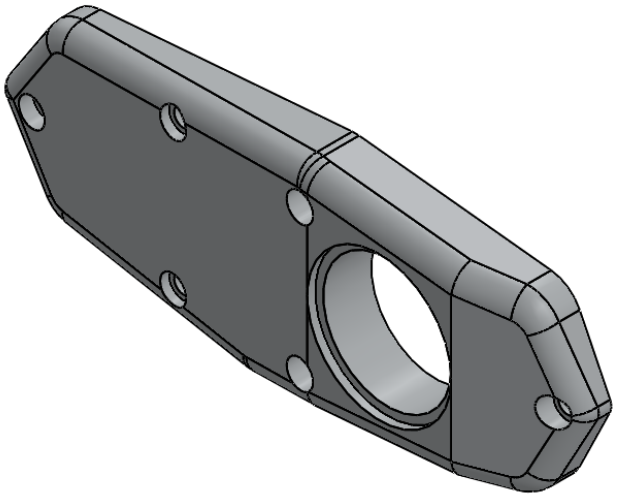

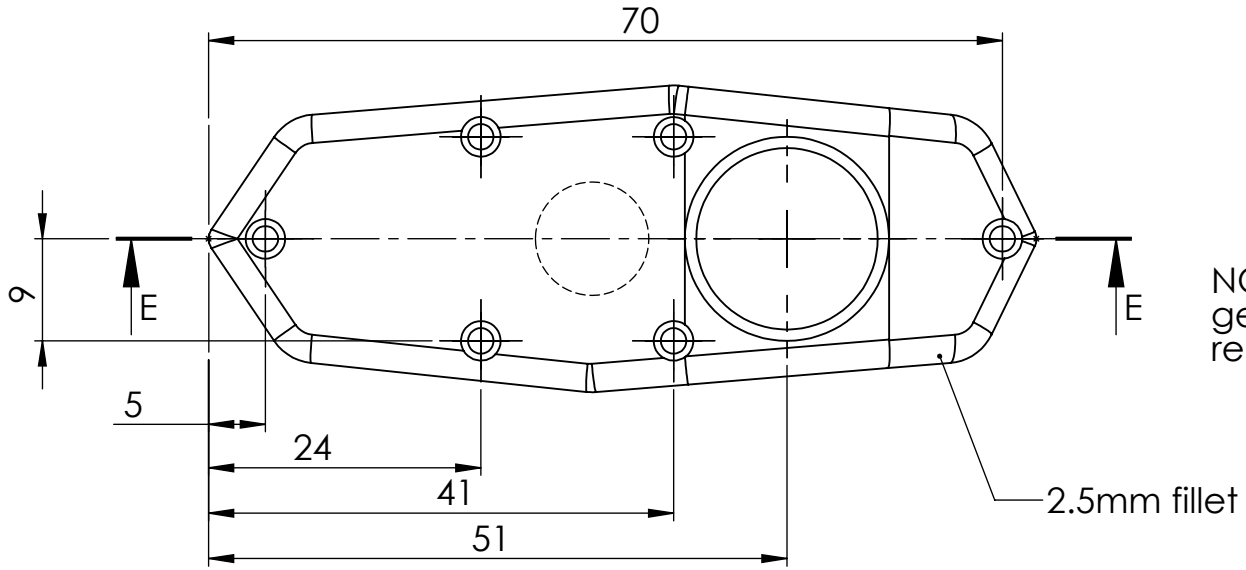

NOTE: The bolt pattern is the same as the gear box. Also the shape of the part is related to the gear box.

SolidWorks Student Edition.
For Academic Use Only.

PROPRIETARY AND CONFIDENTIAL THE INFORMATION CONTAINED IN THIS DRAWING IS THE SOLE PROPERTY OF UNIVERSITY OF IDAHO, ME DEPARTMENT. ANY REPRODUCTION IN PART OR AS A WHOLE WITHOUT THE WRITTEN PERMISSION OF UNIVERSITY OF IDAHO, ME DEPARTMENT IS PROHIBITED.	DIMENSIONS ARE IN MILLIMETERS THIRD ANGLE PROJECTION MATERIAL: 1060 Alloy	Fantastic Four: The Barr & Stroud Engine
DEFAULT TOLERANCES: LINEAR: X.±.25 X.X±.1 X.XX±.01 X.XXX±.002 ANGULAR: X.± 2 X.X± 1 X.XX± 0 30'	DESCRIPTION: Gear Box Cover CHECKED BY: DATE: DRAWN BY: Richard Broaddus DATE: 12/1/2011 FILE NAME: Gear Box Cover (RB).SLDPRT	**UNIVERSITY OF IDAHO ME DEPARTMENT** PART #: 5-02 QTY: 1 SCALE: 3:2 SHEET: 39 OF 55

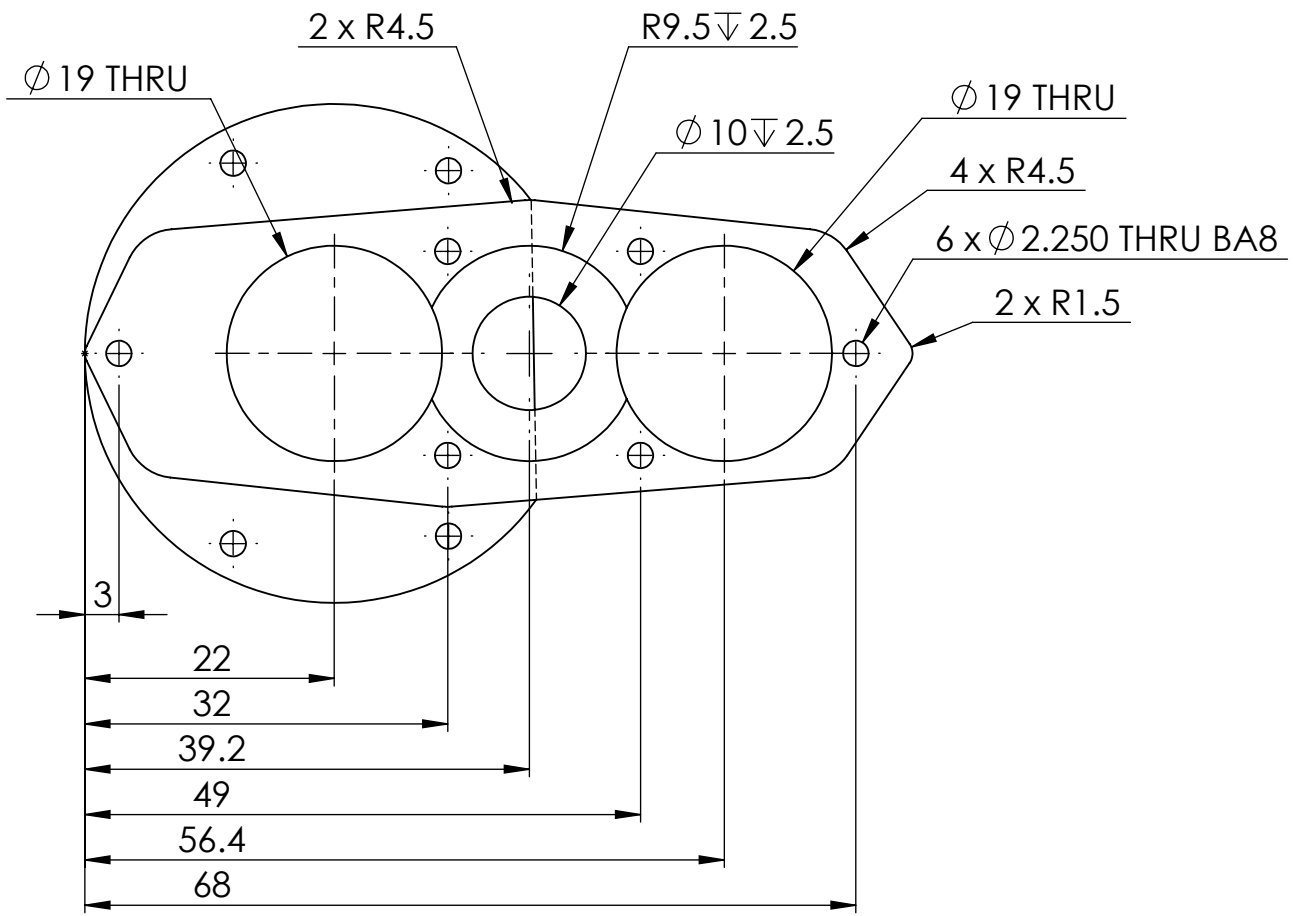

SolidWorks Student Edition.
For Academic Use Only.

PROPRIETARY AND CONFIDENTIAL THE INFORMATION CONTAINED IN THIS DRAWING IS THE SOLE PROPERTY OF UNIVERSITY OF IDAHO, ME DEPARTMENT. ANY REPRODUCTION IN PART OR AS A WHOLE WITHOUT THE WRITTEN PERMISSION OF UNIVERSITY OF IDAHO, ME DEPARTMENT IS PROHIBITED.	DIMENSIONS ARE IN MILLIMETERS THIRD ANGLE PROJECTION MATERIAL: 1060 Alloy	Fantastic Four: The Barr & Stroud Engine
DEFAULT TOLERANCES: LINEAR: X. ± .25, X.X ± .1, X.XX ± .01, X.XXX ± .002 ANGULAR: X. ± 2, X.X ± 1, X.XX ± 0 30'	DESCRIPTION: Gear Box CHECKED BY: DATE: DRAWN BY: Richard Broaddus DATE: 12/1/2011 FILE NAME: Gear Box (RB).SLDPRT	**UNIVERSITY OF IDAHO ME DEPARTMENT** PART #: 5-01 QTY: 1 SCALE: 3:2 SHEET: 38 OF 55

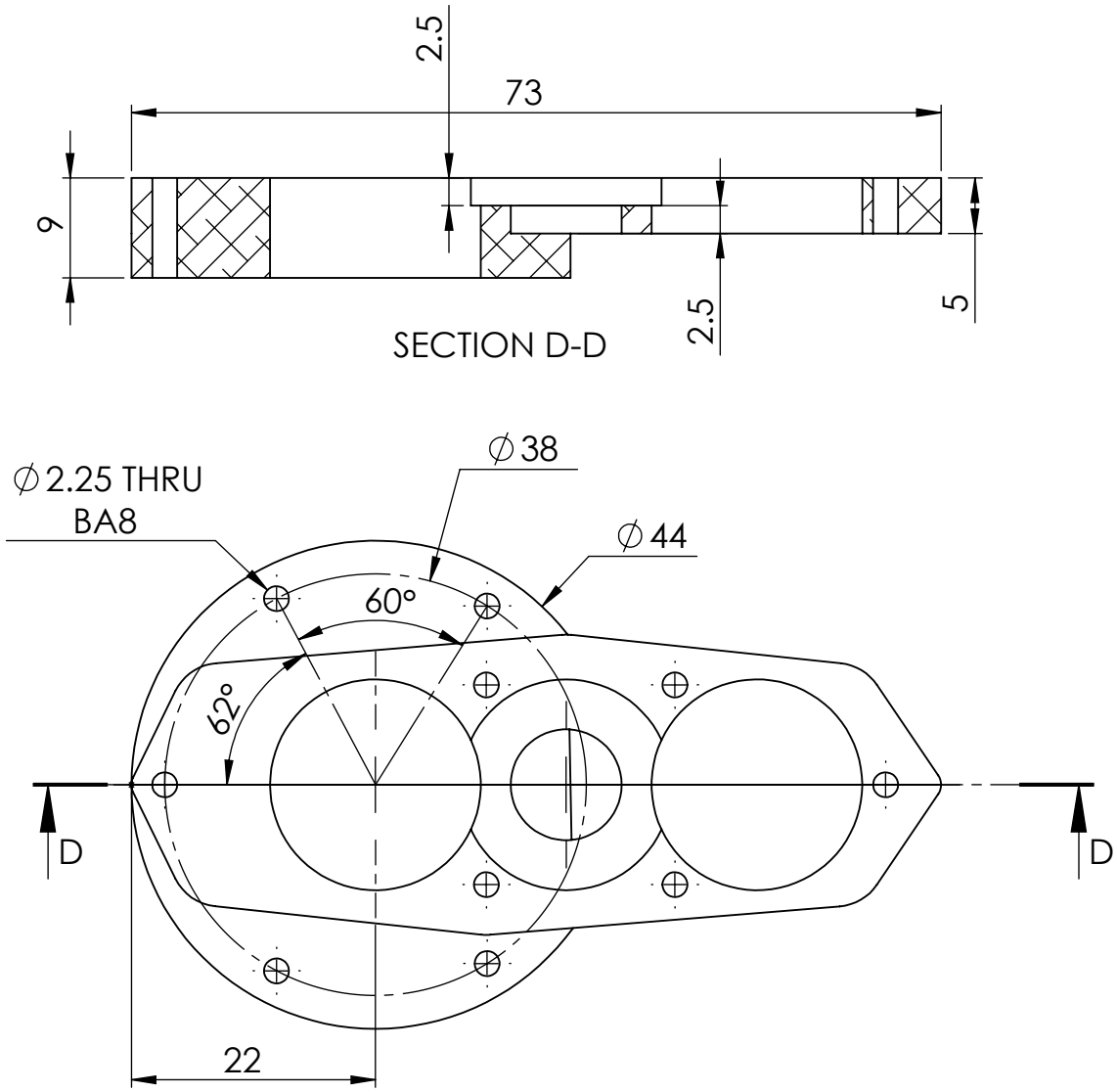

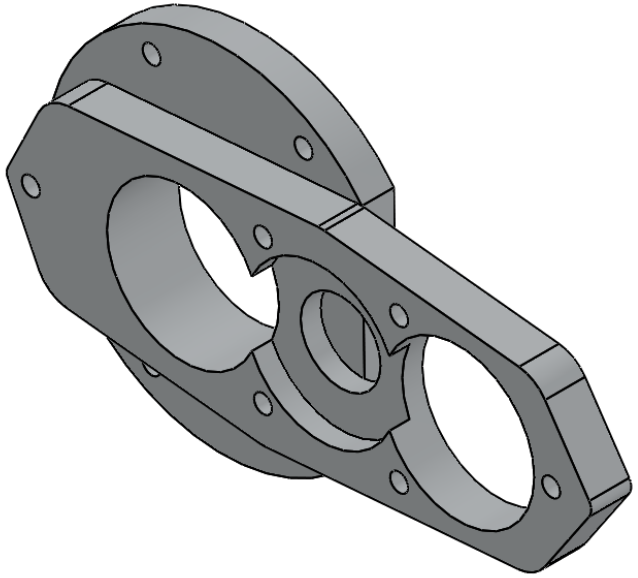

SolidWorks Student Edition.
For Academic Use Only.

PROPRIETARY AND CONFIDENTIAL THE INFORMATION CONTAINED IN THIS DRAWING IS THE SOLE PROPERTY OF UNIVERSITY OF IDAHO, ME DEPARTMENT. ANY REPRODUCTION IN PART OR AS A WHOLE WITHOUT THE WRITTEN PERMISSION OF UNIVERSITY OF IDAHO, ME DEPARTMENT IS PROHIBITED.	DIMENSIONS ARE IN MILLIMETERS THIRD ANGLE PROJECTION MATERIAL: 1060 Alloy	Fantastic Four: The Barr & Stroud Engine
DEFAULT TOLERANCES: LINEAR: X. ± .25, X.X ± .1, X.XX ± .01, X.XXX ± .002 ANGULAR: X. ± 2, X.X ± 1, X.XX ± 0 30'	DESCRIPTION: Gear Box CHECKED BY: DATE: DRAWN BY: Richard Broaddus DATE: 12/1/2011 FILE NAME: Gear Box (RB).SLDPRT	**UNIVERSITY OF IDAHO ME DEPARTMENT** PART #: 5-01 QTY: 1 SCALE: 3:2 SHEET: 37 OF 55

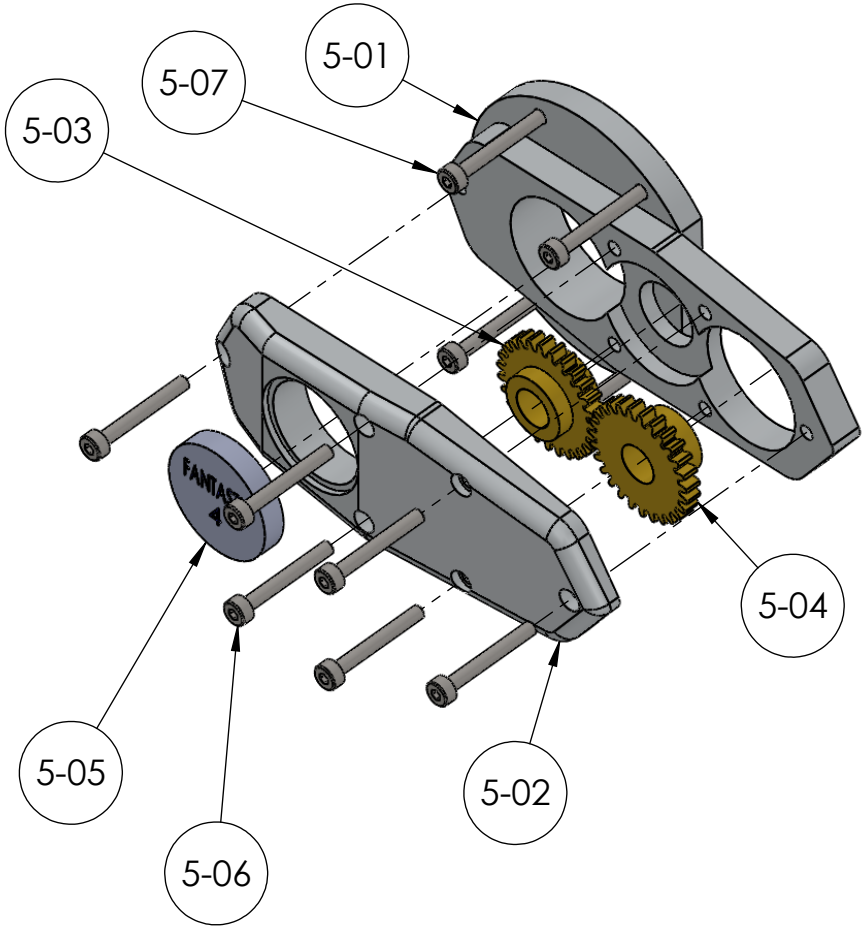

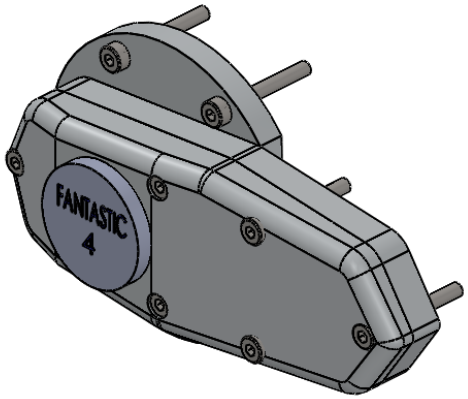

Part #	DESCRIPTION	QTY.	Sheet #
5-01	Gear Box	1	37, 38
5-03	Idler Gear	1	39
5-04	Magneto Gear	1	40
5-02	Gear Box Cover	1	41
5-05	Name Plate	1	42
5-07	SHCS M - 2 x 0.4 x 8	4	-
		10	

PROPRIETARY AND CONFIDENTIAL
THE INFORMATION CONTAINED IN THIS DRAWING IS THE SOLE PROPERTY OF UNIVERSITY OF IDAHO, ME DEPARTMENT. ANY REPRODUCTION IN PART OR AS A WHOLE WITHOUT THE WRITTEN PERMISSION OF UNIVERSITY OF IDAHO, ME DEPARTMENT IS PROHIBITED.

DIMENSIONS ARE IN MILLIMETERS
THIRD ANGLE PROJECTION

MATERIAL: Brass & 1060 Alloy

Fantastic Four: The Barr & Stroud Engine

DEFAULT TOLERANCES:

LINEAR: X. ± .25, X.X ± .1, X.XX ± .01, X.XXX ± .002

ANGULAR: X. ± 2, X.X ± 1, X.XX ± 0 30'

DESCRIPTION: Gear Box Assembly

CHECKED BY: DATE:

DRAWN BY: Richard Broaddus DATE: 12/9/2011

FILE NAME: Gear box assembly exploded.SLDPRT

UNIVERSITY OF IDAHO ME DEPARTMENT

PART #: 5-00 QTY: 1

SCALE: 1:1 SHEET: 36 OF 55

SolidWorks Student Edition.
For Academic Use Only.

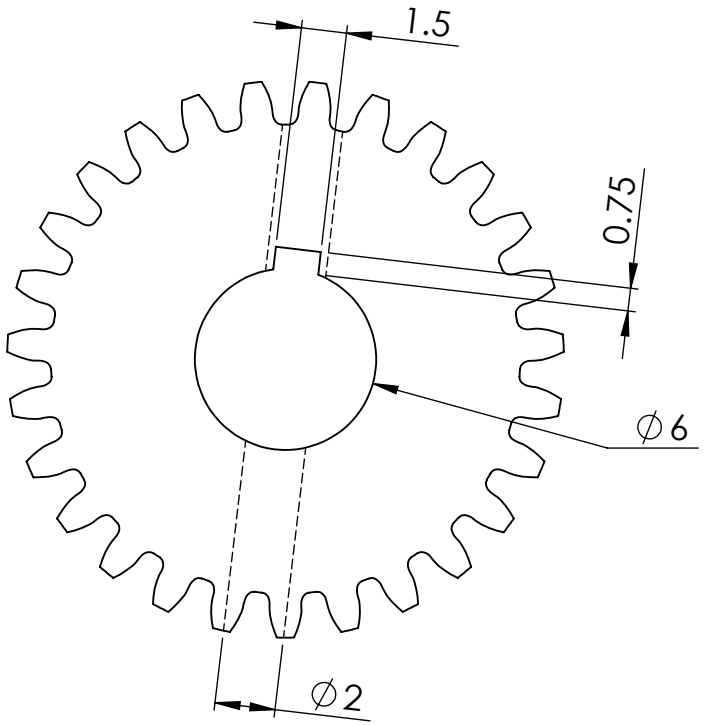

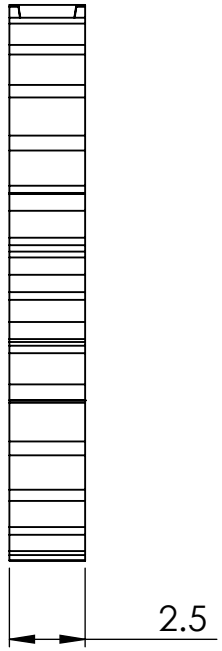

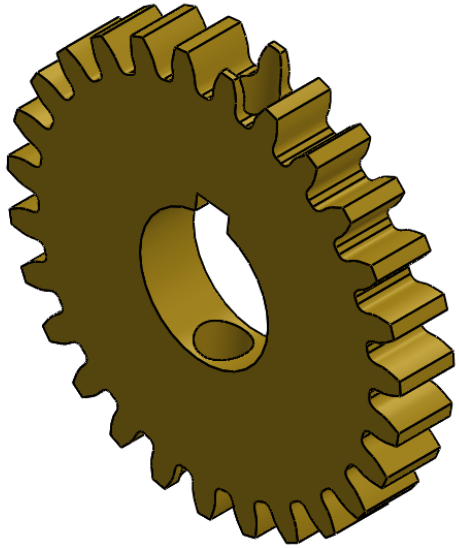

NOTE: PCD=17.145 OD=18.415
DP=40 27-T

SolidWorks Student Edition.
For Academic Use Only.

PROPRIETARY AND CONFIDENTIAL
THE INFORMATION CONTAINED IN THIS DRAWING IS THE SOLE PROPERTY OF UNIVERSITY OF IDAHO, ME DEPARTMENT. ANY REPRODUCTION IN PART OR AS A WHOLE WITHOUT THE WRITTEN PERMISSION OF UNIVERSITY OF IDAHO, ME DEPARTMENT IS PROHIBITED.

DIMENSIONS ARE IN MILLIMETERS
THIRD ANGLE PROJECTION

MATERIAL: Brass

Fantastic Four: The Barr & Stroud Engine

DEFAULT TOLERANCES:

LINEAR:	ANGULAR:
X. ± .25	X. ± 2
X.X ± .1	X.X ± 1
X.XX ± .01	X.XX ± 0 30'
X.XXX ± .002	

DESCRIPTION:	Magneto Drive Gear		
CHECKED BY:		DATE:	
DRAWN BY:	Phillip Spinden	DATE:	12/8/2011
FILE NAME:	Driven Gear (PS).SLDPRT		

UNIVERSITY OF IDAHO
ME DEPARTMENT

PART #:	4-03	QTY:	1
SCALE:	4:1	SHEET:	35 OF 55

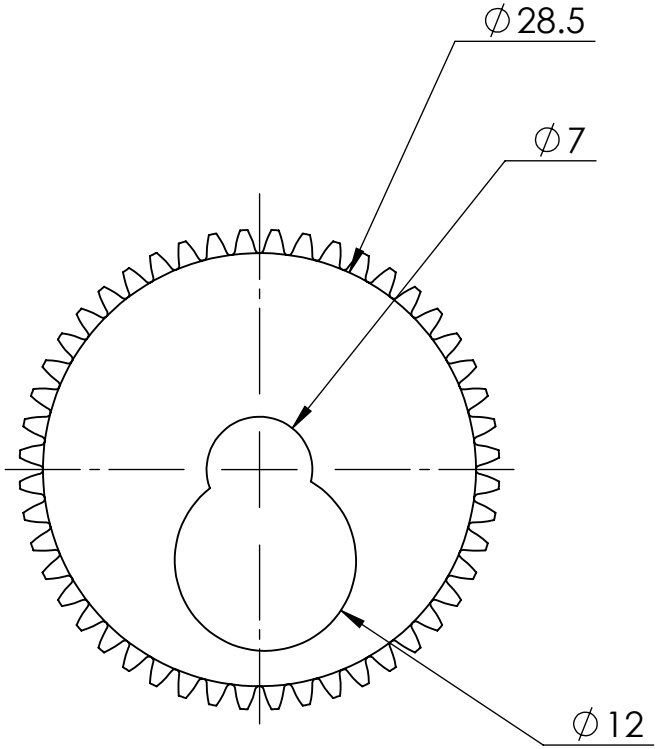

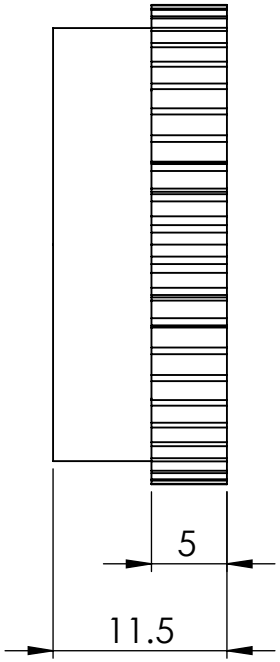

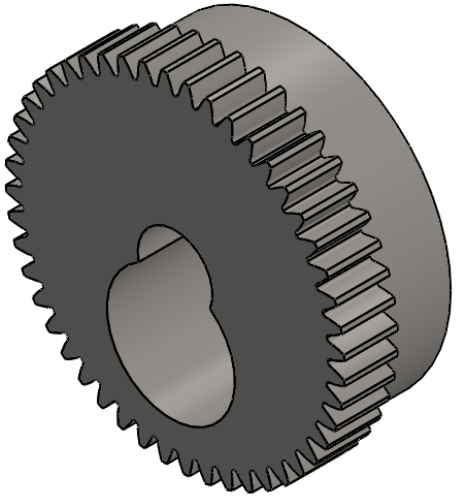

NOTE: PCD=30.48 OD= 31.75
DP=40 48-T

Eccentric circle is 12mm diameter and intersects the center of the gear

SolidWorks Student Edition.
For Academic Use Only.

PROPRIETARY AND CONFIDENTIAL THE INFORMATION CONTAINED IN THIS DRAWING IS THE SOLE PROPERTY OF UNIVERSITY OF IDAHO, ME DEPARTMENT. ANY REPRODUCTION IN PART OR AS A WHOLE WITHOUT THE WRITTEN PERMISSION OF UNIVERSITY OF IDAHO, ME DEPARTMENT IS PROHIBITED.	DIMENSIONS ARE IN MILLIMETERS THIRD ANGLE PROJECTION	Fantastic Four: The Barr & Stroud Engine
	MATERIAL: Alloy Steel	
DEFAULT TOLERANCES: LINEAR: X.±.25 X.X±.1 X.XX±.01 X.XXX±.002 ANGULAR: X.± 2 X.X± 1 X.XX± 0 30'	DESCRIPTION: Sleeve Drive Gear	**UNIVERSITY OF IDAHO ME DEPARTMENT**
	CHECKED BY: DATE:	
	DRAWN BY: Phillip Spinden DATE: 12/8/2011	PART #: 4-02 QTY: 1
	FILE NAME: Sleeve Drive Gear (PS).SLDPRT	SCALE: 2:1 SHEET: 34 OF 55

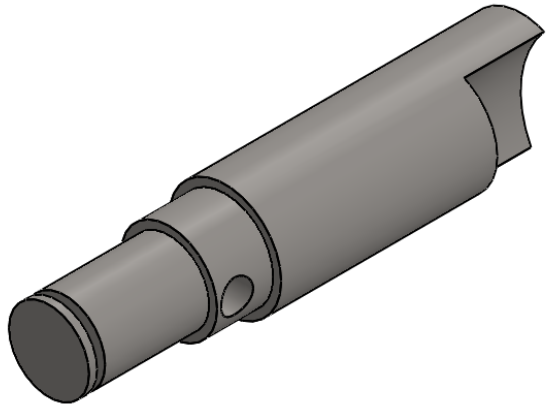

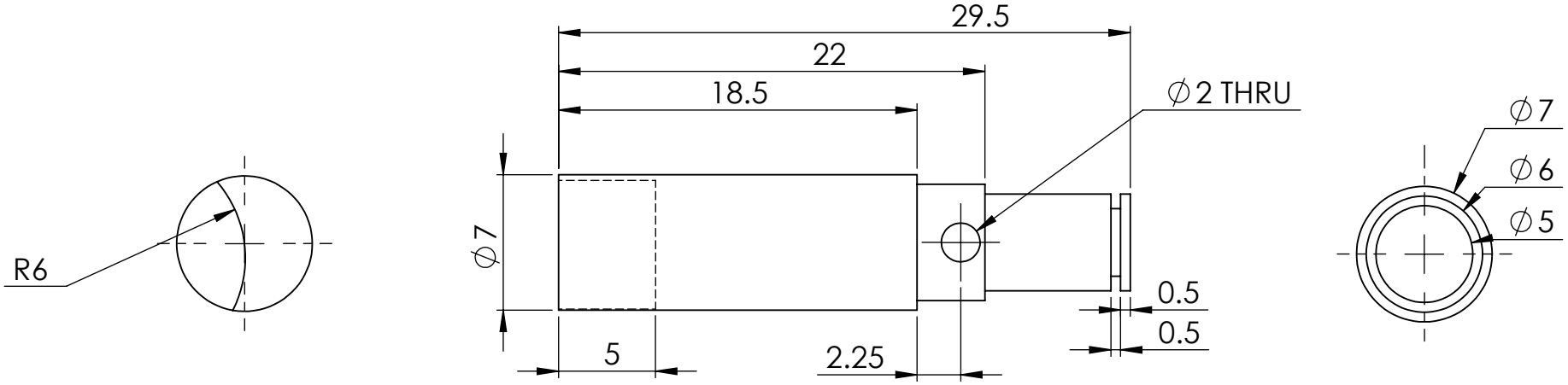

NOTE: The Cutout edge passes through the center of the shaft

SolidWorks Student Edition.
For Academic Use Only.

PROPRIETARY AND CONFIDENTIAL
THE INFORMATION CONTAINED IN THIS DRAWING IS THE SOLE PROPERTY OF UNIVERSITY OF IDAHO, ME DEPARTMENT. ANY REPRODUCTION IN PART OR AS A WHOLE WITHOUT THE WRITTEN PERMISSION OF UNIVERSITY OF IDAHO, ME DEPARTMENT IS PROHIBITED.

DIMENSIONS ARE IN MILLIMETERS
THIRD ANGLE PROJECTION

MATERIAL: Alloy Steel

Fantastic Four: The Barr & Stroud Engine

UNIVERSITY OF IDAHO ME DEPARTMENT

DEFAULT TOLERANCES:

LINEAR:	ANGULAR:
X. ± .25	X. ± 2
X.X ± .1	X.X ± 1
X.XX ± .01	X.XX ± 0 30'
X.XXX ± .002	

DESCRIPTION:	Gear Shaft		
CHECKED BY:		DATE:	
DRAWN BY:	Phillip Spinden	DATE:	12/8/2011
FILE NAME:	Gear shaft (PS).SLDPRT		

PART #:	4-01	QTY:	1
SCALE:	3:1	SHEET:	33 OF 55

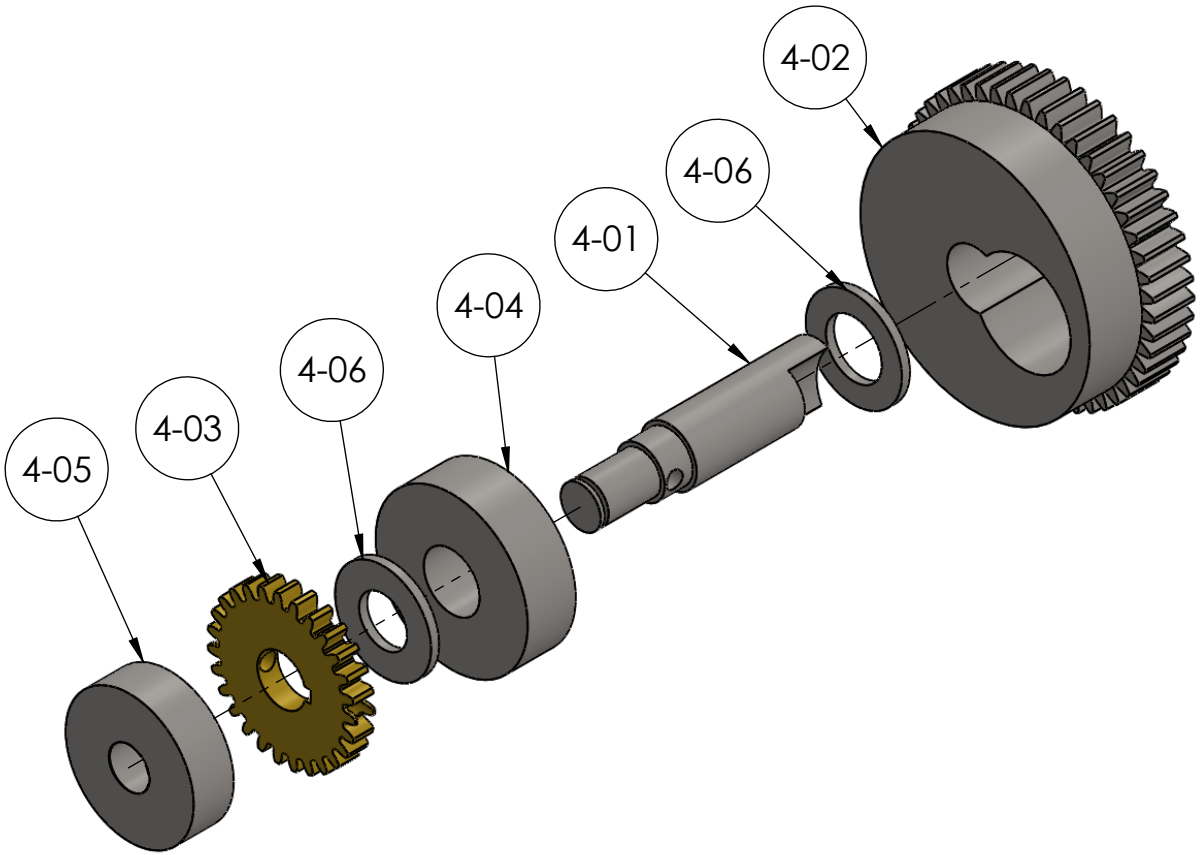

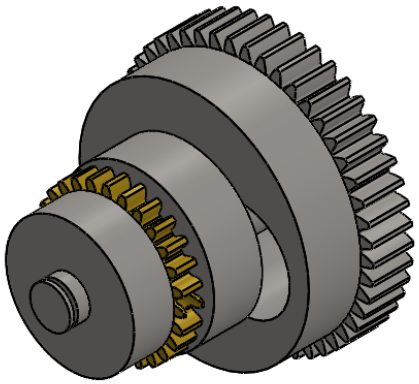

Part #	DESCRIPTION	QTY.	Sheet #
4-01	Gear Shaft	1	33
4-02	Sleeve Drive Gear	1	34
4-03	Magneto Drive Gear	1	35
4-05	Ballrace 16x5x5	1	-
4-04	Ballrace 19x7x6	1	-
4-06	1mm Spacer	2	-

PROPRIETARY AND CONFIDENTIAL
THE INFORMATION CONTAINED IN THIS DRAWING IS THE SOLE PROPERTY OF UNIVERSITY OF IDAHO, ME DEPARTMENT. ANY REPRODUCTION IN PART OR AS A WHOLE WITHOUT THE WRITTEN PERMISSION OF UNIVERSITY OF IDAHO, ME DEPARTMENT IS PROHIBITED.

DIMENSIONS ARE IN MILLIMETERS
THIRD ANGLE PROJECTION

MATERIAL: Assorted

Fantastic Four: The Barr & Stroud Engine

DEFAULT TOLERANCES:
LINEAR: X. ± .25, X.X ± .1, X.XX ± .01, X.XXX ± .002
ANGULAR: X. ± 2, X.X ± 1, X.XX ± 0 30'

DESCRIPTION: Gear Shaft Assembly
CHECKED BY: DATE:
DRAWN BY: Phillip Spinden DATE: 12/6/2011
FILE NAME: Gear shaft (PS).SLDPRT

UNIVERSITY OF IDAHO ME DEPARTMENT

PART #: 4-00 QTY: 1
SCALE: 1.5:1 SHEET: 32 OF 55

SolidWorks Student Edition.
For Academic Use Only.

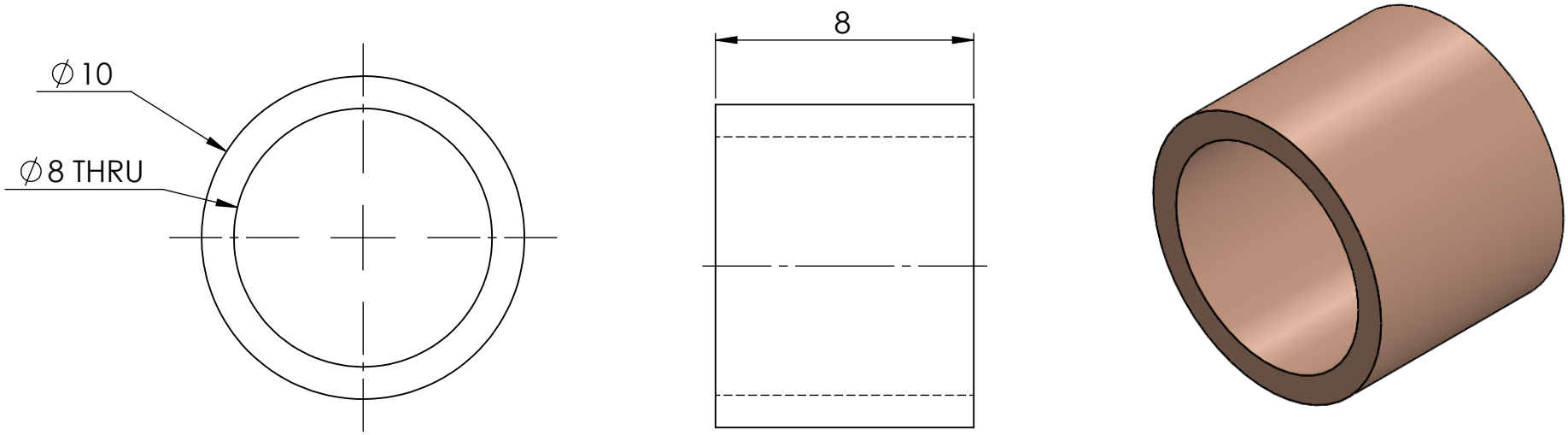

SolidWorks Student Edition.
For Academic Use Only.

PROPRIETARY AND CONFIDENTIAL
THE INFORMATION CONTAINED IN THIS DRAWING IS THE SOLE PROPERTY OF UNIVERSITY OF IDAHO, ME DEPARTMENT. ANY REPRODUCTION IN PART OR AS A WHOLE WITHOUT THE WRITTEN PERMISSION OF UNIVERSITY OF IDAHO, ME DEPARTMENT IS PROHIBITED.

DIMENSIONS ARE IN MILLIMETERS
THIRD ANGLE PROJECTION

MATERIAL: Commercial Bronze, UNS C22000 (90-10 Bronze)

Fantastic Four: The Barr & Stroud Engine

UNIVERSITY OF IDAHO ME DEPARTMENT

DEFAULT TOLERANCES:

LINEAR:	ANGULAR:
X. ± .25	X. ± 2
X.X ± .1	X.X ± 1
X.XX ± .01	X.XX ± 0 30'
X.XXX ± .002	

DESCRIPTION:	Connecting Rod Bushing		
CHECKED BY:		DATE:	
DRAWN BY:	Richard Broaddus	DATE:	12/8/2011
FILE NAME:	Connecting Rod Bushing (RB).SLDPRT		

PART #:	3-05	QTY:	1
SCALE:	5:1	SHEET:	31 OF 55

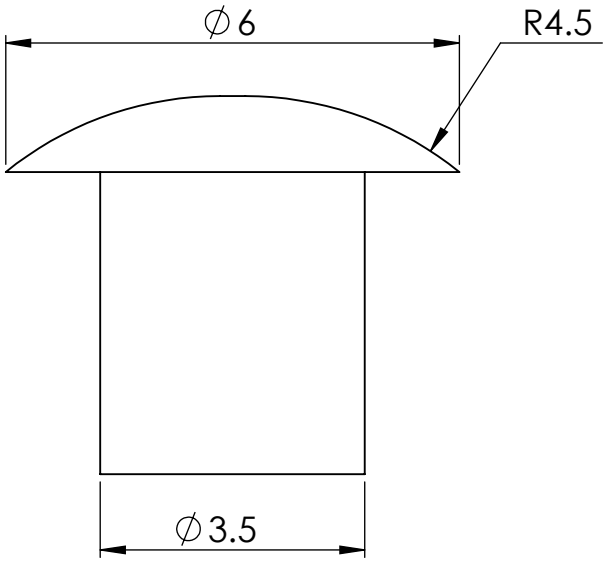

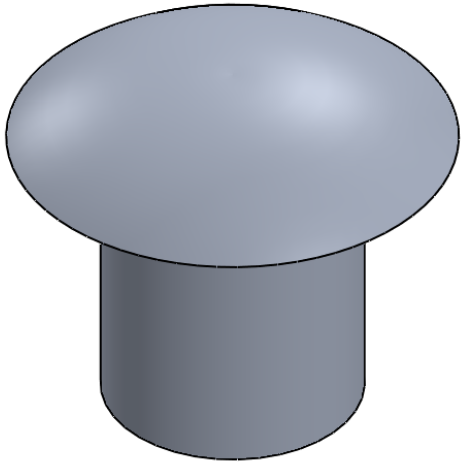

SolidWorks Student Edition.
For Academic Use Only.

PROPRIETARY AND CONFIDENTIAL THE INFORMATION CONTAINED IN THIS DRAWING IS THE SOLE PROPERTY OF UNIVERSITY OF IDAHO, ME DEPARTMENT. ANY REPRODUCTION IN PART OR AS A WHOLE WITHOUT THE WRITTEN PERMISSION OF UNIVERSITY OF IDAHO, ME DEPARTMENT IS PROHIBITED.	DIMENSIONS ARE IN MILLIMETERS THIRD ANGLE PROJECTION MATERIAL: 1060 Alloy	Fantastic Four: The Barr & Stroud Engine
DEFAULT TOLERANCES: LINEAR: X. ± .25, X.X ± .1, X.XX ± .01, X.XXX ± .002 ANGULAR: X. ± 2, X.X ± 1, X.XX ± 0 30'	DESCRIPTION: End Caps CHECKED BY: DATE: DRAWN BY: Richard Broaddus DATE: 12/8/2011 FILE NAME: End Cap (RB).SLDPRT	**UNIVERSITY OF IDAHO ME DEPARTMENT** PART #: 3-04 QTY: 2 SCALE: 10:1 SHEET: 30 OF 55

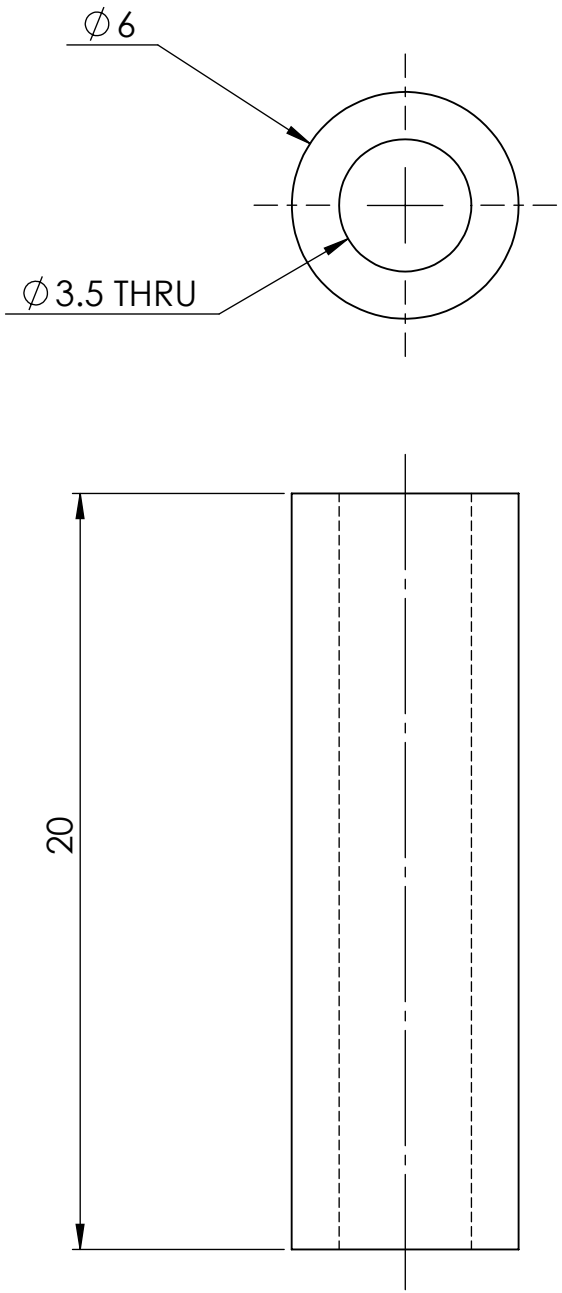

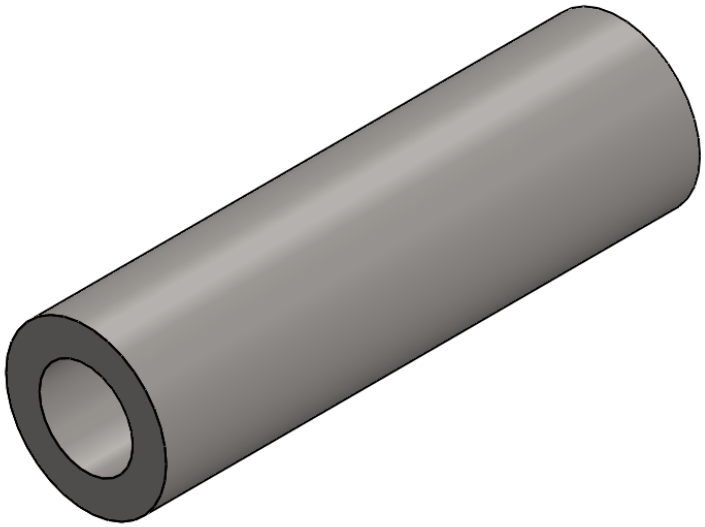

SolidWorks Student Edition.
For Academic Use Only.

PROPRIETARY AND CONFIDENTIAL
THE INFORMATION CONTAINED IN THIS DRAWING IS THE SOLE PROPERTY OF UNIVERSITY OF IDAHO, ME DEPARTMENT. ANY REPRODUCTION IN PART OR AS A WHOLE WITHOUT THE WRITTEN PERMISSION OF UNIVERSITY OF IDAHO, ME DEPARTMENT IS PROHIBITED.

DIMENSIONS ARE IN MILLIMETERS
THIRD ANGLE PROJECTION

MATERIAL: Silver Steel

Fantastic Four:
The Barr & Stroud Engine

DEFAULT TOLERANCES:

LINEAR:
X. ± .25
X.X ± .1
X.XX ± .01
X.XXX ± .002

ANGULAR:
X. ± 2
X.X ± 1
X.XX ± 0 30'

DESCRIPTION: Piston Pin
CHECKED BY:
DATE:
DRAWN BY: Alex Ackerman
DATE: 12/8/2011
FILE NAME: Piston Pin (RB).SLDPRT

UNIVERSITY OF IDAHO
ME DEPARTMENT

PART #: 3-03
QTY: 1
SCALE: 5:1
SHEET: 29 OF 55

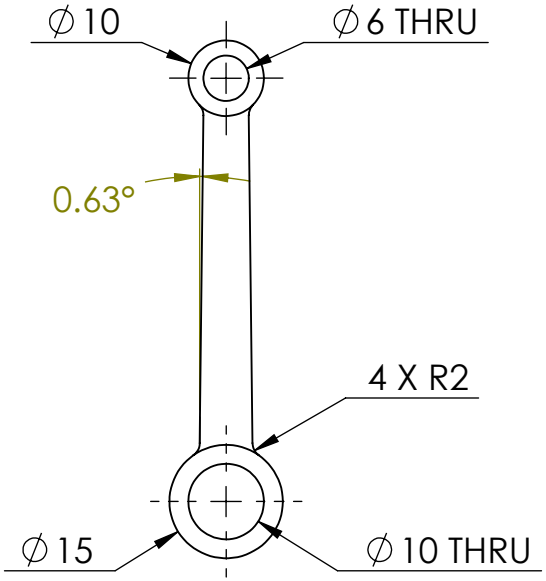

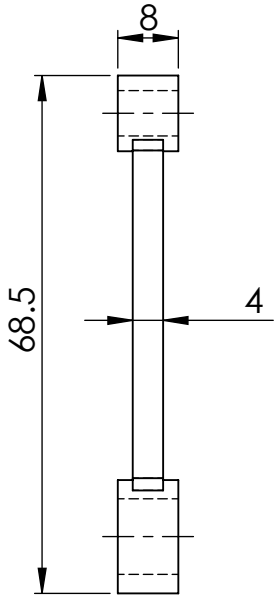

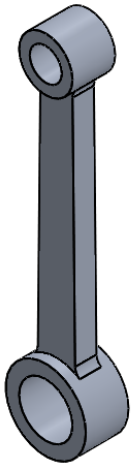

SolidWorks Student Edition.
For Academic Use Only.

PROPRIETARY AND CONFIDENTIAL THE INFORMATION CONTAINED IN THIS DRAWING IS THE SOLE PROPERTY OF UNIVERSITY OF IDAHO, ME DEPARTMENT. ANY REPRODUCTION IN PART OR AS A WHOLE WITHOUT THE WRITTEN PERMISSION OF UNIVERSITY OF IDAHO, ME DEPARTMENT IS PROHIBITED.	DIMENSIONS ARE IN MILLIMETER THIRD ANGLE PROJECTION MATERIAL: 2618-T61 (SS)	Fantastic Four: The Barr & Stroud Engine
DEFAULT TOLERANCES: LINEAR: X. ± .25, X.X ± .1, X.XX ± .01, X.XXX ± .002 ANGULAR: X. ± 2, X.X ± 1, X.XX ± 0 30'	DESCRIPTION: Connecting Rod CHECKED BY: DATE: DRAWN BY: Richard Broaddus DATE: 12/8/2011 FILE NAME: Connecting Rod (RB).SLDPRT	**UNIVERSITY OF IDAHO ME DEPARTMENT** PART #: 3-02 QTY: 1 SCALE: 1:1 SHEET: 28 OF 55

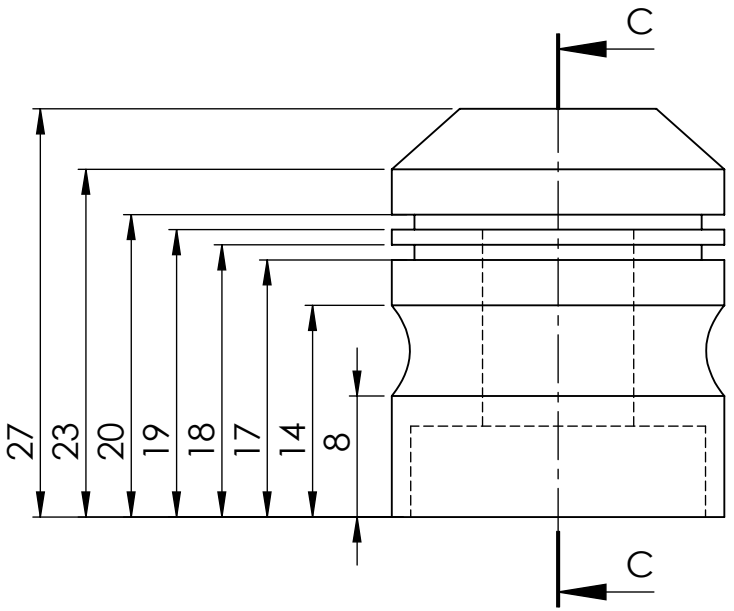

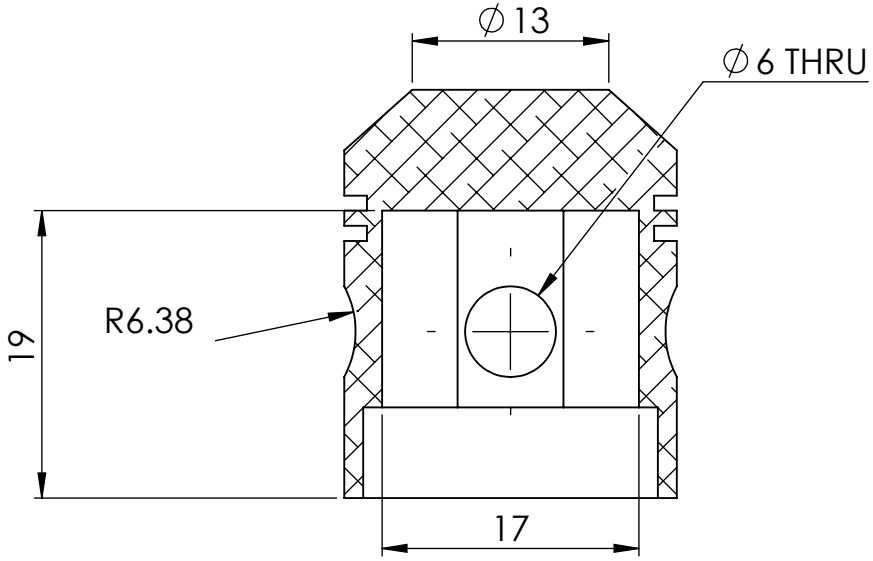

SECTION C-C

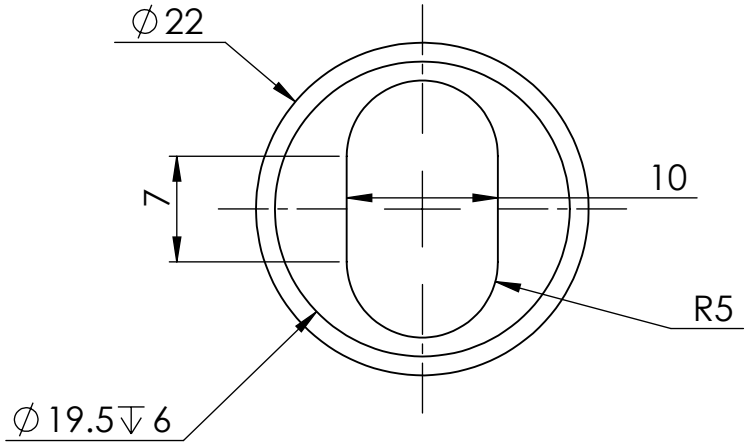

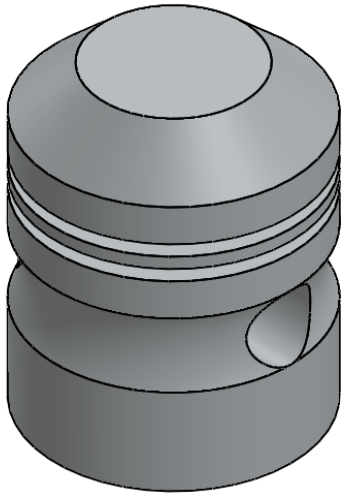

SolidWorks Student Edition.
For Academic Use Only.

PROPRIETARY AND CONFIDENTIAL THE INFORMATION CONTAINED IN THIS DRAWING IS THE SOLE PROPERTY OF UNIVERSITY OF IDAHO, ME DEPARTMENT. ANY REPRODUCTION IN PART OR AS A WHOLE WITHOUT THE WRITTEN PERMISSION OF UNIVERSITY OF IDAHO, ME DEPARTMENT IS PROHIBITED.	DIMENSIONS ARE IN MILLIMETERS THIRD ANGLE PROJECTION	Fantastic Four: The Barr & Stroud Engine
	MATERIAL: 2618-T61 (SS)	
DEFAULT TOLERANCES: LINEAR: X.±.25, X.X±.1, X.XX±.01, X.XXX±.002 ANGULAR: X.± 2, X.X± 1, X.XX± 0 30'	DESCRIPTION: Piston Head	**UNIVERSITY OF IDAHO ME DEPARTMENT**
	CHECKED BY: / DATE:	
	DRAWN BY: Richard Broaddus / DATE: 12/8/2011	PART #: 3-01 / QTY: 1
	FILE NAME: Piston Head (RB).SLDPRT	SCALE: 2:1 / SHEET: 27 OF 55

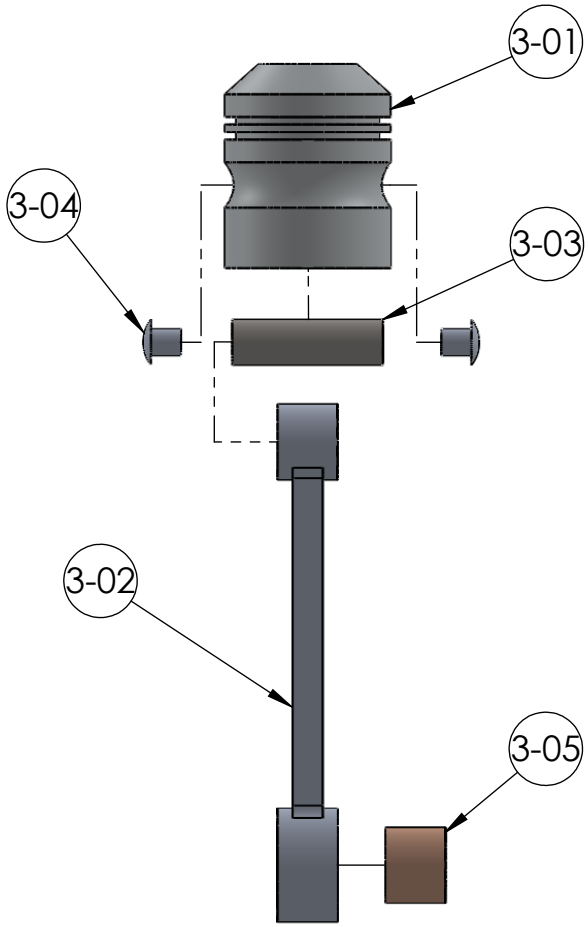

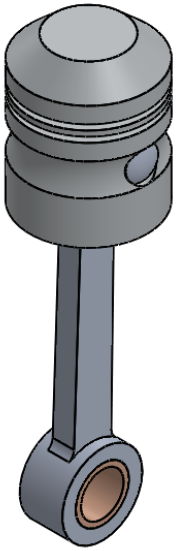

PART #	DESCRIPTION	QTY.	SHEET #
3-01	Piston Head	1	27
3-02	Connecting Rod	1	28
3-03	Connecting Rod Bushing	1	29
3-04	End Caps	2	30
3-05	Piston Pin	1	31

PROPRIETARY AND CONFIDENTIAL
THE INFORMATION CONTAINED IN THIS DRAWING IS THE SOLE PROPERTY OF UNIVERSITY OF IDAHO, ME DEPARTMENT. ANY REPRODUCTION IN PART OR AS A WHOLE WITHOUT THE WRITTEN PERMISSION OF UNIVERSITY OF IDAHO, ME DEPARTMENT IS PROHIBITED.

DIMENSIONS ARE IN MILLIMETERS
THIRD ANGLE PROJECTION

MATERIAL: Assorted

Fantastic Four: The Barr & Stroud Engine

DEFAULT TOLERANCES:
LINEAR: X. ± .25, X.X ± .1, X.XX ± .01, X.XXX ± .002
ANGULAR: X. ± 2, X.X ± 1, X.XX ± 0 30'

DESCRIPTION: Piston Connecting Rod Assembly
CHECKED BY: DATE:
DRAWN BY: Alex Ackerman DATE: 12/8/2011
FILE NAME: Piston-Connecting Rod.SLDPRT

UNIVERSITY OF IDAHO ME DEPARTMENT

PART #: 3-00 QTY: 1
SCALE: 1:1 SHEET: 26 OF 55

SolidWorks Student Edition.
For Academic Use Only.

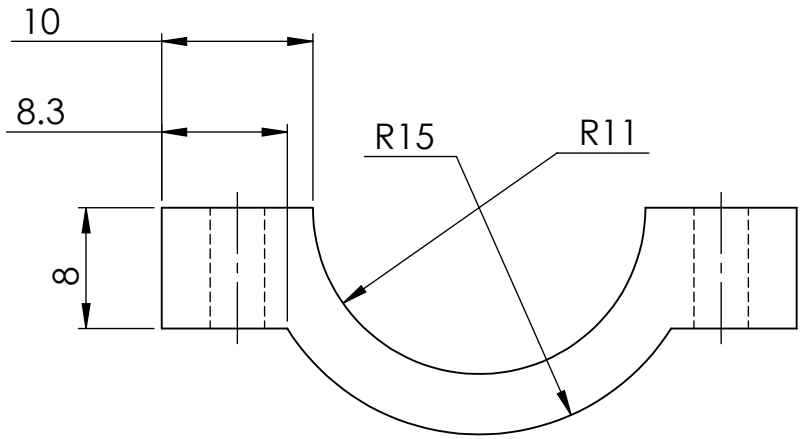

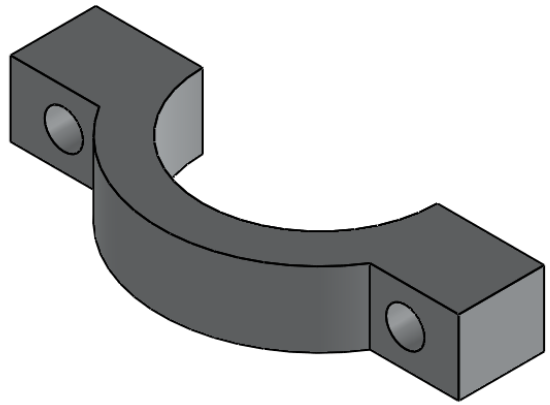

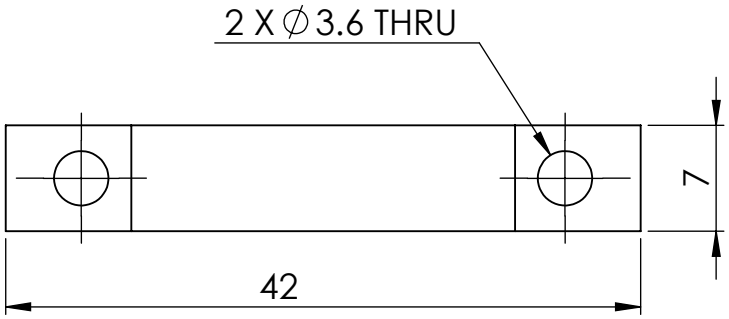

SolidWorks Student Edition.
For Academic Use Only.

PROPRIETARY AND CONFIDENTIAL THE INFORMATION CONTAINED IN THIS DRAWING IS THE SOLE PROPERTY OF UNIVERSITY OF IDAHO, ME DEPARTMENT. ANY REPRODUCTION IN PART OR AS A WHOLE WITHOUT THE WRITTEN PERMISSION OF UNIVERSITY OF IDAHO, ME DEPARTMENT IS PROHIBITED.	DIMENSIONS ARE IN MILLIMETERS THIRD ANGLE PROJECTION MATERIAL: 6061-T6 (SS)	Fantastic Four: The Barr & Stroud Engine
DEFAULT TOLERANCES: LINEAR: X. ± .25, X.X ± .1, X.XX ± .01, X.XXX ± .002; ANGULAR: X. ± 2, X.X ± 1, X.XX ± 0 30'	DESCRIPTION: Main Bearing Cap CHECKED BY: DATE: DRAWN BY: Brian Zaladonis DATE: 11/27/2011 FILE NAME: Main Bearing Cap (BZ).SLDPRT	**UNIVERSITY OF IDAHO ME DEPARTMENT** PART #: 2-13 QTY: 2 SCALE: 1:2 SHEET: 25 OF 55

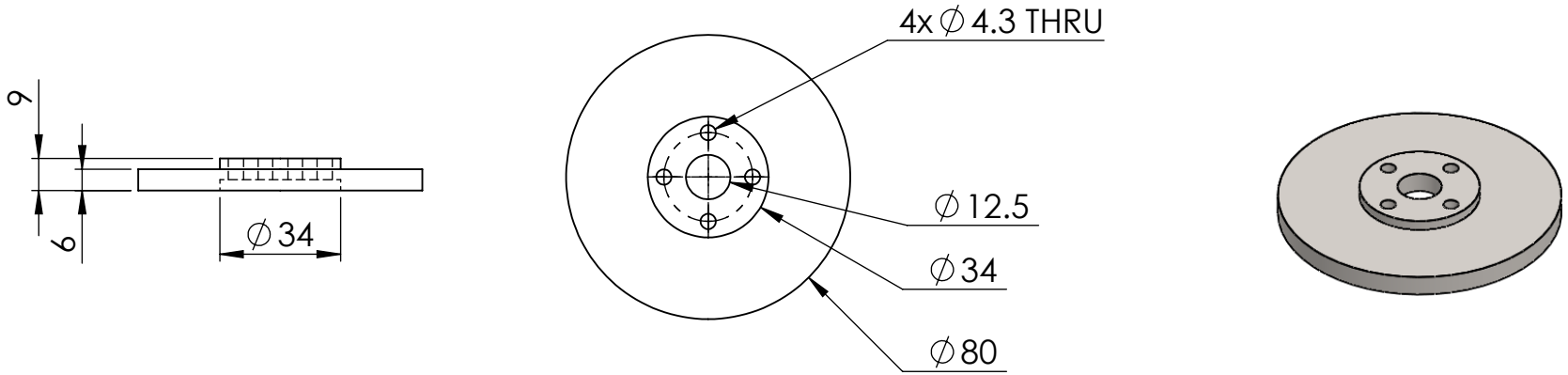

SolidWorks Student Edition.
For Academic Use Only.

PROPRIETARY AND CONFIDENTIAL
THE INFORMATION CONTAINED IN THIS DRAWING IS THE SOLE PROPERTY OF UNIVERSITY OF IDAHO, ME DEPARTMENT. ANY REPRODUCTION IN PART OR AS A WHOLE WITHOUT THE WRITTEN PERMISSION OF UNIVERSITY OF IDAHO, ME DEPARTMENT IS PROHIBITED.

DIMENSIONS ARE IN MILLIMETERS
THIRD ANGLE PROJECTION

MATERIAL: Plain Carbon Steel

Fantastic Four: The Barr & Stroud Engine

UNIVERSITY OF IDAHO ME DEPARTMENT

DEFAULT TOLERANCES:

LINEAR:	ANGULAR:
X. ± .25	X. ± 2
X.X ± .1	X.X ± 1
X.XX ± .01	X.XX ± 0 30'
X.XXX ± .002	

DESCRIPTION:	Flywheel		
CHECKED BY:		DATE:	
DRAWN BY:	Alex Ackerman	DATE:	12/8/2011
FILE NAME:	FLYWHEEL(AA).SLDPRT		

PART #: 2-12	QTY: 1
SCALE: 1:2	SHEET: 24 OF 55

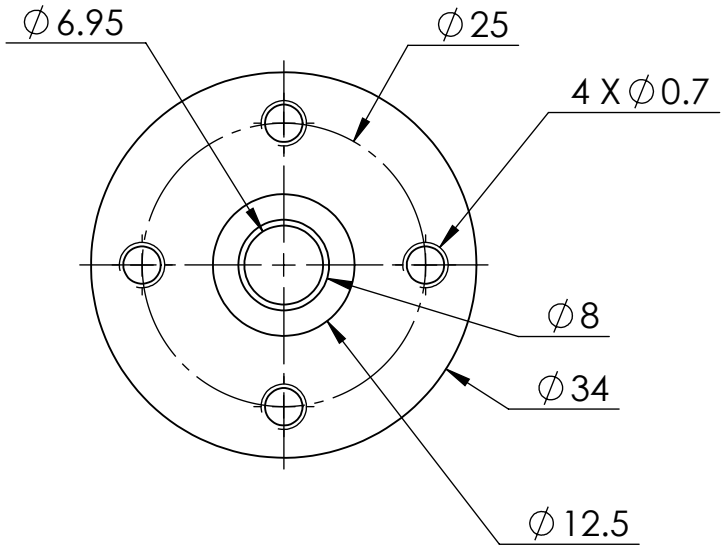

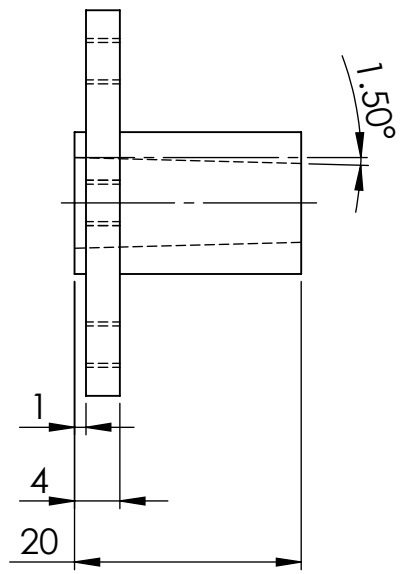

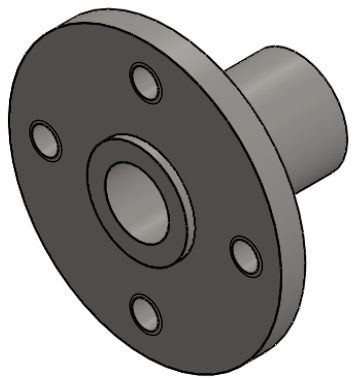

SolidWorks Student Edition.
For Academic Use Only.

PROPRIETARY AND CONFIDENTIAL THE INFORMATION CONTAINED IN THIS DRAWING IS THE SOLE PROPERTY OF UNIVERSITY OF IDAHO, ME DEPARTMENT. ANY REPRODUCTION IN PART OR AS A WHOLE WITHOUT THE WRITTEN PERMISSION OF UNIVERSITY OF IDAHO, ME DEPARTMENT IS PROHIBITED.	DIMENSIONS ARE IN MILLIMETERS THIRD ANGLE PROJECTION MATERIAL: Alloy Steel	Fantastic Four: The Barr & Stroud Engine
DEFAULT TOLERANCES: LINEAR: X. ± .25, X.X ± .1, X.XX ± .01, X.XXX ± .002 ANGULAR: X. ± 2, X.X ± 1, X.XX ± 0 30'	DESCRIPTION: Flywheel Hub CHECKED BY: DATE: DRAWN BY: Richard Broaddus DATE: 12/8/2011 FILE NAME: HUB flywheel (RB).SLDPRT	**UNIVERSITY OF IDAHO ME DEPARTMENT** PART #: 2-11 QTY: 1 SCALE: 1.5:1 SHEET: 23 OF 55

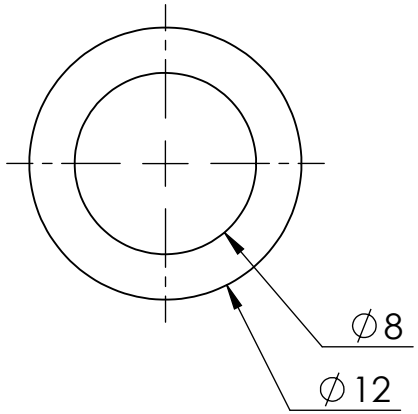

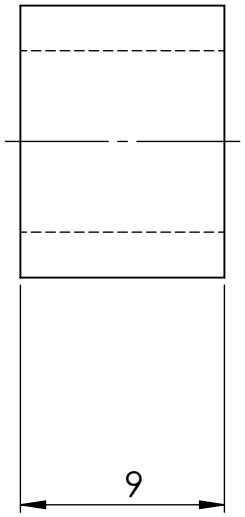

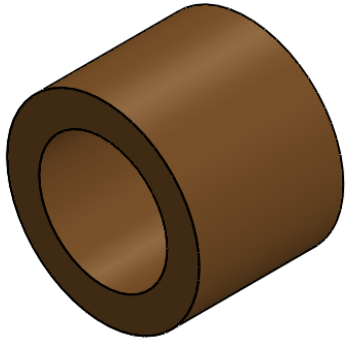

SolidWorks Student Edition.
For Academic Use Only.

PROPRIETARY AND CONFIDENTIAL THE INFORMATION CONTAINED IN THIS DRAWING IS THE SOLE PROPERTY OF UNIVERSITY OF IDAHO, ME DEPARTMENT. ANY REPRODUCTION IN PART OR AS A WHOLE WITHOUT THE WRITTEN PERMISSION OF UNIVERSITY OF IDAHO, ME DEPARTMENT IS PROHIBITED.	DIMENSIONS ARE IN MILLIMETERS THIRD ANGLE PROJECTION		Fantastic Four: The Barr & Stroud Engine
	MATERIAL: Aluminum Bronze		
DEFAULT TOLERANCES: LINEAR: X.±.25 X.X±.1 X.XX±.01 X.XXX±.002 ANGULAR: X.± 2 X.X± 1 X.XX± 0 30'	DESCRIPTION: Bronze Bushing		**UNIVERSITY OF IDAHO ME DEPARTMENT**
	CHECKED BY:	DATE:	
	DRAWN BY: Brian Zaladonis	DATE: 11/27/2011	PART #: 2-10 QTY: 1
	FILE NAME: Bronze bushing (BZ).SLDPRT		SCALE: 3:1 SHEET: 22 OF 55

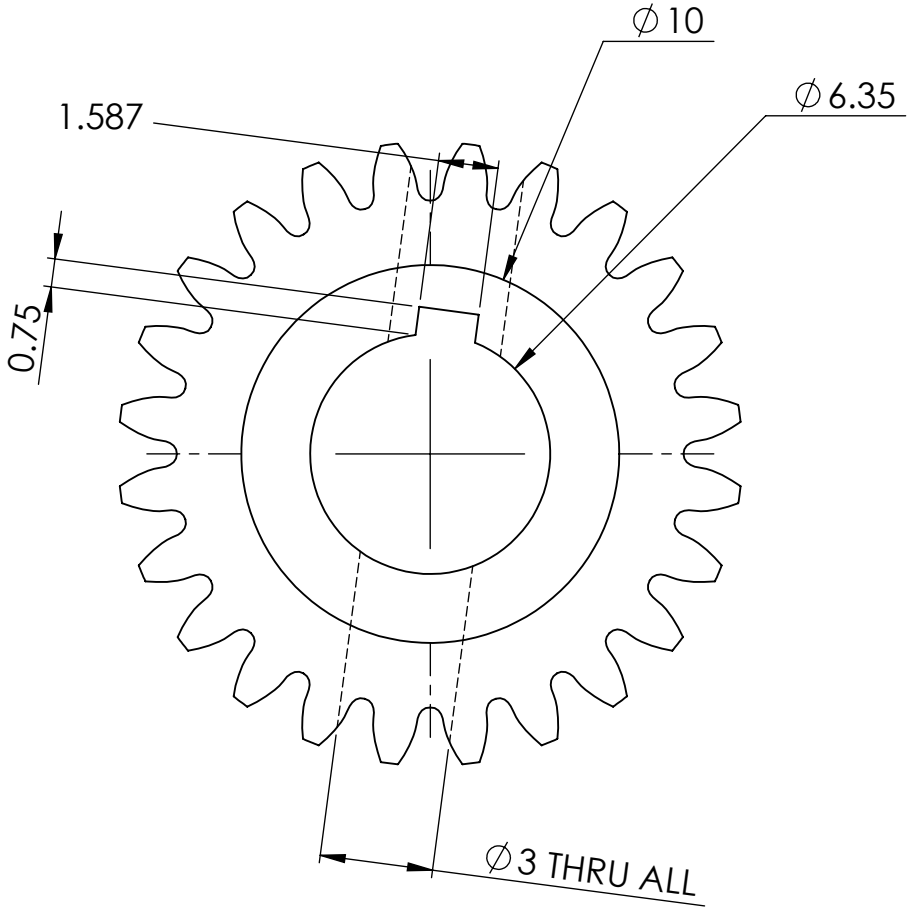

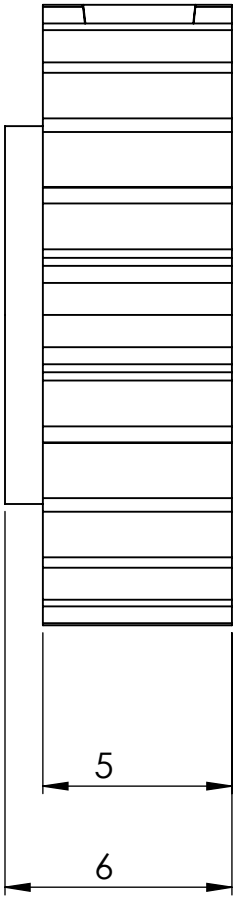

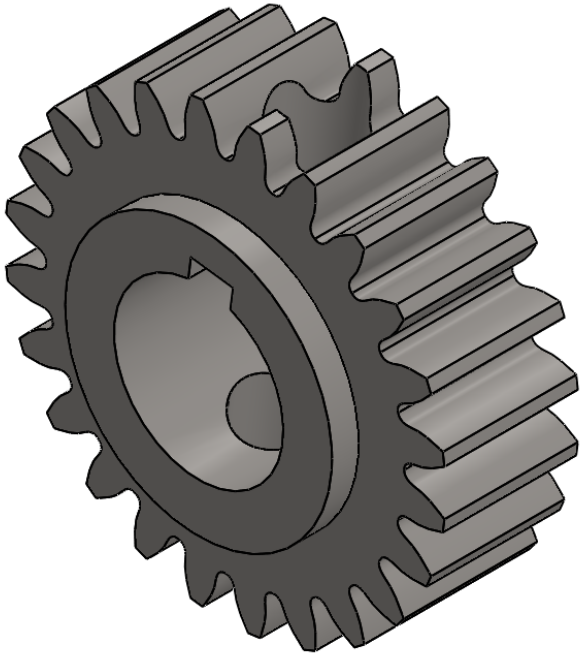

NOTE: DP=40 24-T
PCD: 15.24mm OD: 16.51mm

SolidWorks Student Edition.
For Academic Use Only.

PROPRIETARY AND CONFIDENTIAL THE INFORMATION CONTAINED IN THIS DRAWING IS THE SOLE PROPERTY OF UNIVERSITY OF IDAHO, ME DEPARTMENT. ANY REPRODUCTION IN PART OR AS A WHOLE WITHOUT THE WRITTEN PERMISSION OF UNIVERSITY OF IDAHO, ME DEPARTMENT IS PROHIBITED.	DIMENSIONS ARE IN MILLIMETERS THIRD ANGLE PROJECTION	Fantastic Four: The Barr & Stroud Engine
	MATERIAL: Alloy Steel	
DEFAULT TOLERANCES: LINEAR: X.±.25 X.X±.1 X.XX±.01 X.XXX±.002 ANGULAR: X.± 2 X.X± 1 X.XX± 0 30'	DESCRIPTION: Crankshaft Gear	**UNIVERSITY OF IDAHO ME DEPARTMENT**
	CHECKED BY: DATE:	
	DRAWN BY: Phillip Spinden DATE: 12/8/2011	PART #: 2-09 QTY: 1
	FILE NAME: Crankshaft Gear (PS).SLDPRT	SCALE: 5:1 SHEET: 21 OF 55

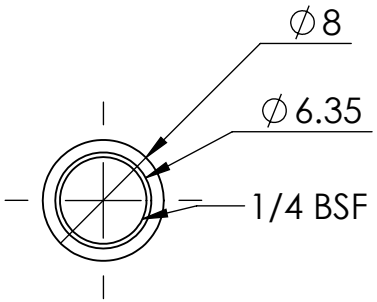

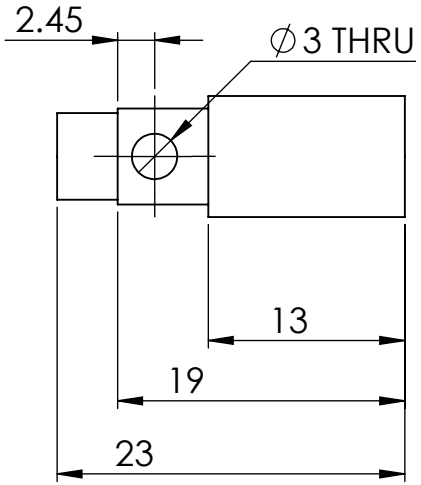

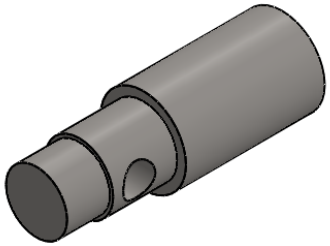

PROPRIETARY AND CONFIDENTIAL
THE INFORMATION CONTAINED IN THIS DRAWING IS THE SOLE PROPERTY OF UNIVERSITY OF IDAHO, ME DEPARTMENT. ANY REPRODUCTION IN PART OR AS A WHOLE WITHOUT THE WRITTEN PERMISSION OF UNIVERSITY OF IDAHO, ME DEPARTMENT IS PROHIBITED.

DIMENSIONS ARE IN MILLIMETERS
THIRD ANGLE PROJECTION

MATERIAL: Alloy Steel

Fantastic Four: The Barr & Stroud Engine

UNIVERSITY OF IDAHO ME DEPARTMENT

DEFAULT TOLERANCES:

LINEAR:	ANGULAR:
X. ± .25	X. ± 2
X.X ± .1	X.X ± 1
X.XX ± .01	X.XX ± 0 30'
X.XXX ± .002	

DESCRIPTION:	Rear Shaft		
CHECKED BY:		DATE:	
DRAWN BY:	Phillip Spinden	DATE:	12/8/2011
FILE NAME:	Rear Shaft (PS).SLDPRT		

PART #:	2-08	QTY:	1
SCALE:	2:1	SHEET:	20 OF 55

SolidWorks Student Edition.
For Academic Use Only.

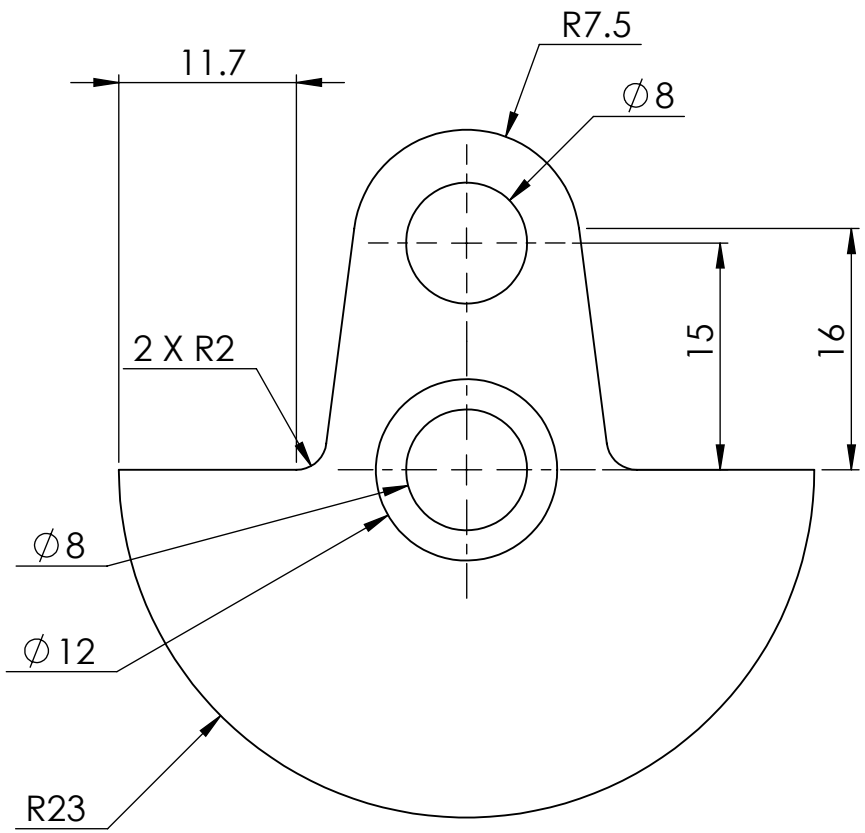

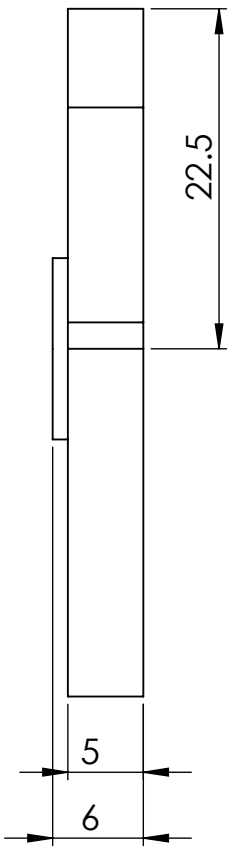

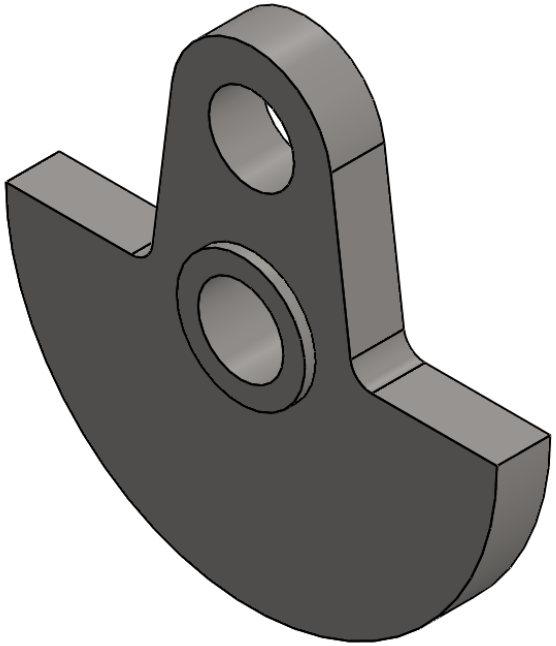

SolidWorks Student Edition.
For Academic Use Only.

PROPRIETARY AND CONFIDENTIAL THE INFORMATION CONTAINED IN THIS DRAWING IS THE SOLE PROPERTY OF UNIVERSITY OF IDAHO, ME DEPARTMENT. ANY REPRODUCTION IN PART OR AS A WHOLE WITHOUT THE WRITTEN PERMISSION OF UNIVERSITY OF IDAHO, ME DEPARTMENT IS PROHIBITED.	DIMENSIONS ARE IN MILLIMETERS THIRD ANGLE PROJECTION	Fantastic Four: The Barr & Stroud Engine
	MATERIAL: Alloy Steel	
DEFAULT TOLERANCES: LINEAR: X.±.25 X.X±.1 X.XX±.01 X.XXX±.002 ANGULAR: X.± 2 X.X± 1 X.XX± 0 30'	DESCRIPTION: Front Counterweight	**UNIVERSITY OF IDAHO ME DEPARTMENT**
	CHECKED BY: DATE:	
	DRAWN BY: Phillip Spinden DATE: 12/8/2011	PART #: 2-07 QTY: 1
	FILE NAME: Front Counterweight (PS).SLDPRT	SCALE: 2:1 SHEET: 19 OF 55

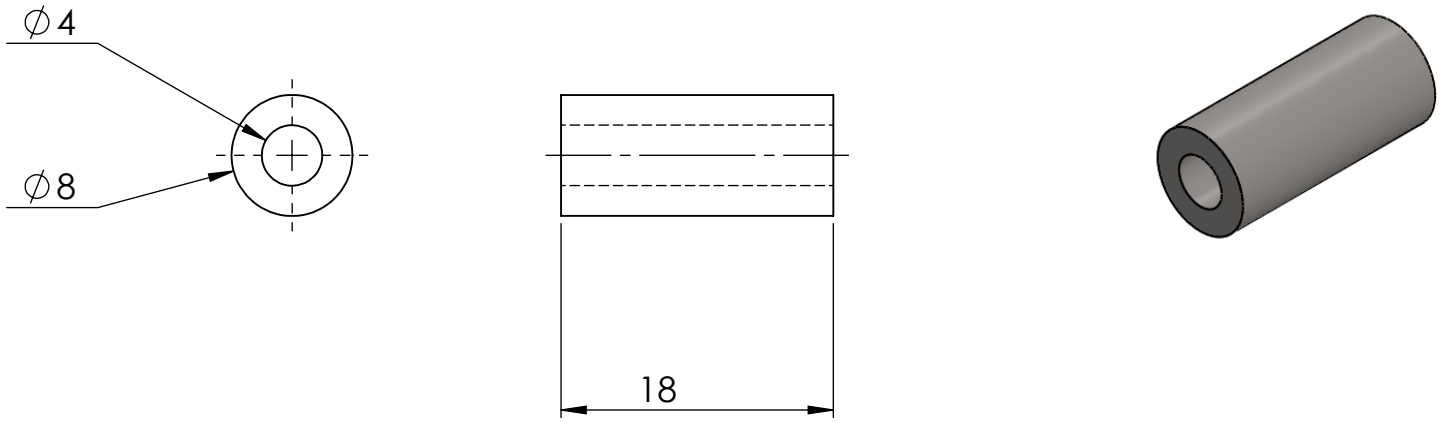

SolidWorks Student Edition.
For Academic Use Only.

PROPRIETARY AND CONFIDENTIAL
THE INFORMATION CONTAINED IN THIS DRAWING IS THE SOLE PROPERTY OF UNIVERSITY OF IDAHO, ME DEPARTMENT. ANY REPRODUCTION IN PART OR AS A WHOLE WITHOUT THE WRITTEN PERMISSION OF UNIVERSITY OF IDAHO, ME DEPARTMENT IS PROHIBITED.

DIMENSIONS ARE IN MILLIMETERS
THIRD ANGLE PROJECTION

MATERIAL: Alloy Steel

Fantastic Four: The Barr & Stroud Engine

UNIVERSITY OF IDAHO ME DEPARTMENT

DEFAULT TOLERANCES:

LINEAR:	ANGULAR:
X. ± .25	X. ± 2
X.X ± .1	X.X ± 1
X.XX ± .01	X.XX ± 0 30'
X.XXX ± .002	

DESCRIPTION:	Crank Pin		
CHECKED BY:		DATE:	
DRAWN BY:	Phillip Spinden	DATE:	12/8/2011
FILE NAME:	Crank Pin (PS).SLDPRT		

PART #: 2-06	QTY: 1
SCALE: 2:1	SHEET: 18 OF 55

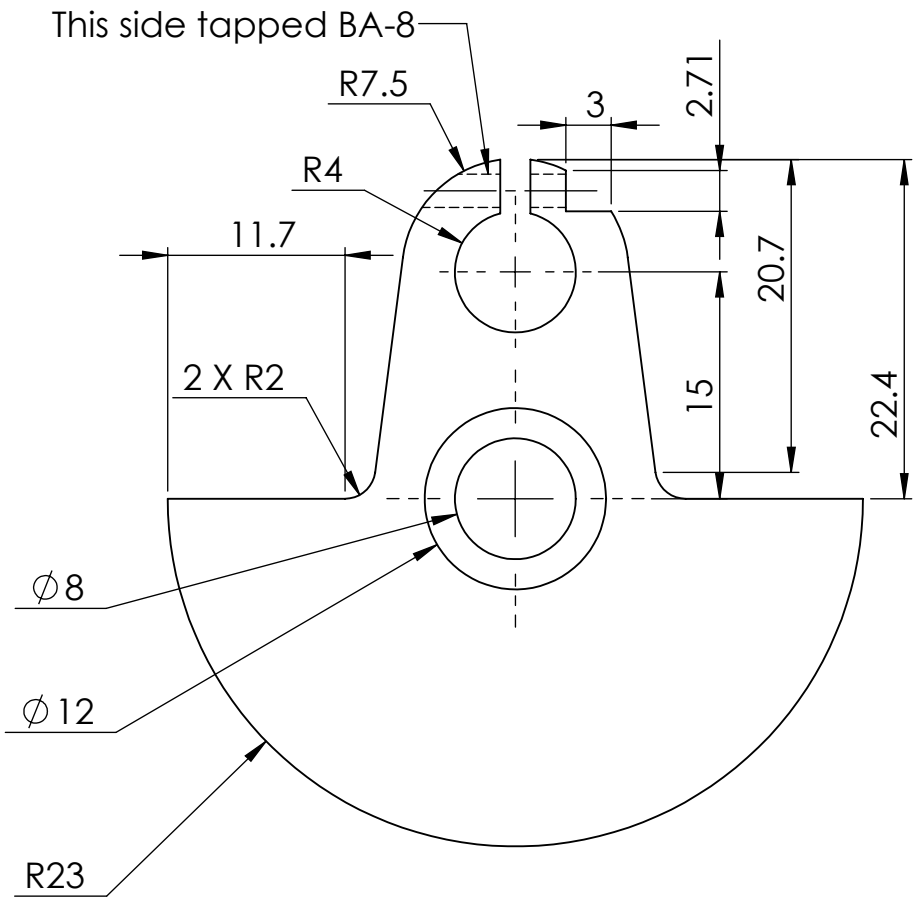

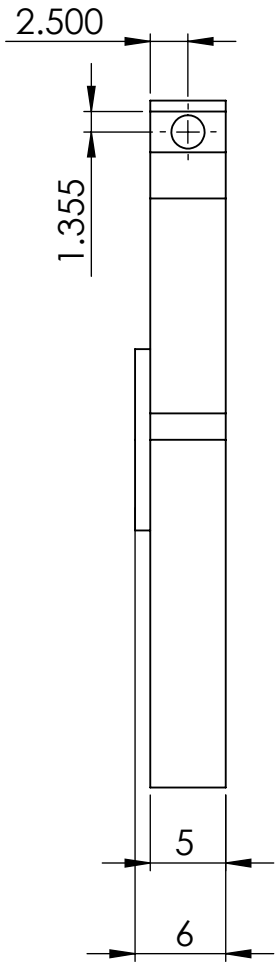

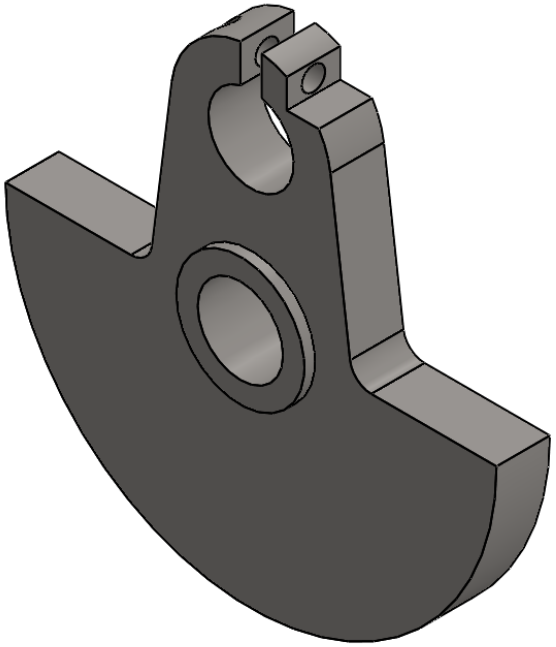

SolidWorks Student Edition.
For Academic Use Only.

PROPRIETARY AND CONFIDENTIAL THE INFORMATION CONTAINED IN THIS DRAWING IS THE SOLE PROPERTY OF UNIVERSITY OF IDAHO, ME DEPARTMENT. ANY REPRODUCTION IN PART OR AS A WHOLE WITHOUT THE WRITTEN PERMISSION OF UNIVERSITY OF IDAHO, ME DEPARTMENT IS PROHIBITED.	DIMENSIONS ARE IN MILLIMETERS THIRD ANGLE PROJECTION	Fantastic Four: The Barr & Stroud Engine
	MATERIAL: Alloy Steel	
DEFAULT TOLERANCES: LINEAR: X. ± .25, X.X ± .1, X.XX ± .01, X.XXX ± .002 ANGULAR: X. ± 2, X.X ± 1, X.XX ± 0 30'	DESCRIPTION: Rear Counterweight	**UNIVERSITY OF IDAHO ME DEPARTMENT**
	CHECKED BY: DATE:	
	DRAWN BY: Phillip Spinden DATE: 12/8/2011	PART #: 2-05 QTY: 1
	FILE NAME: Rear Counterweight (PS).SLDPRT	SCALE: 2:1 SHEET: 17 OF 55

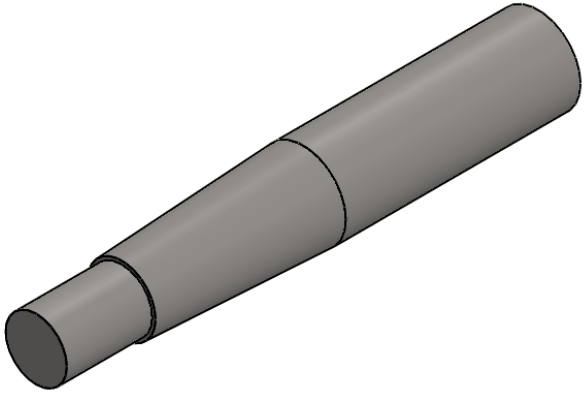

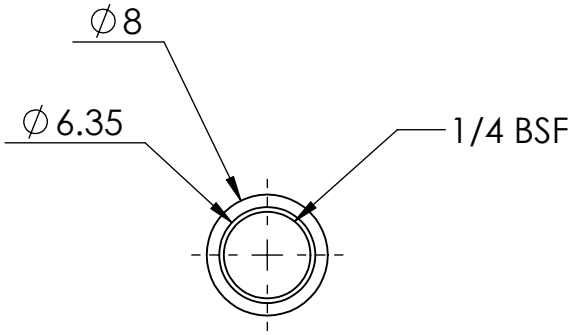

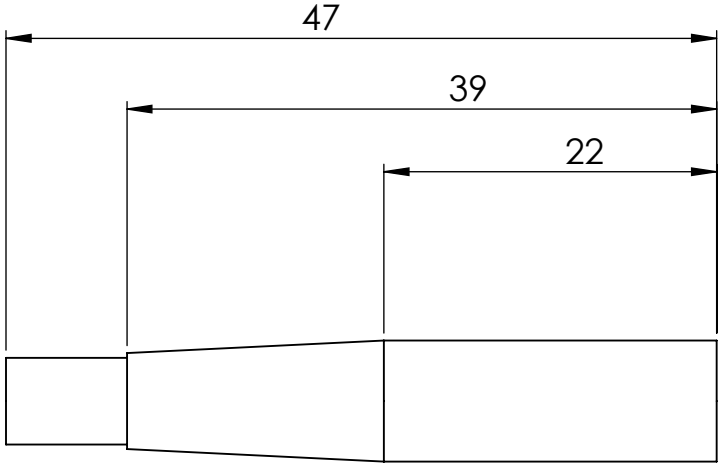

SolidWorks Student Edition.
For Academic Use Only.

PROPRIETARY AND CONFIDENTIAL THE INFORMATION CONTAINED IN THIS DRAWING IS THE SOLE PROPERTY OF UNIVERSITY OF IDAHO, ME DEPARTMENT. ANY REPRODUCTION IN PART OR AS A WHOLE WITHOUT THE WRITTEN PERMISSION OF UNIVERSITY OF IDAHO, ME DEPARTMENT IS PROHIBITED.	DIMENSIONS ARE IN MILLIMETERS THIRD ANGLE PROJECTION	Fantastic Four: The Barr & Stroud Engine
	MATERIAL: Alloy Steel	
DEFAULT TOLERANCES: LINEAR: X.± .25, X.X± .1, X.XX± .01, X.XXX± .002 ANGULAR: X.± 2, X.X± 1, X.XX± 0 30'	DESCRIPTION: Front Shaft	**UNIVERSITY OF IDAHO ME DEPARTMENT**
	CHECKED BY: / DATE:	
	DRAWN BY: Phillip Spinden / DATE: 12/8/2011	PART #: 2-04 / QTY: 1
	FILE NAME: Front Shaft (PS).SLDPRT	SCALE: 2:1 / SHEET: 16 OF 55

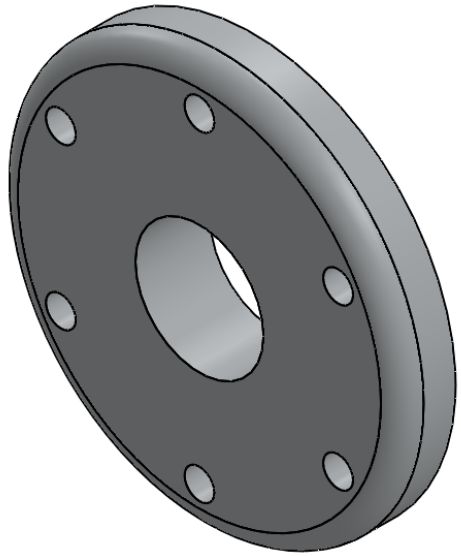

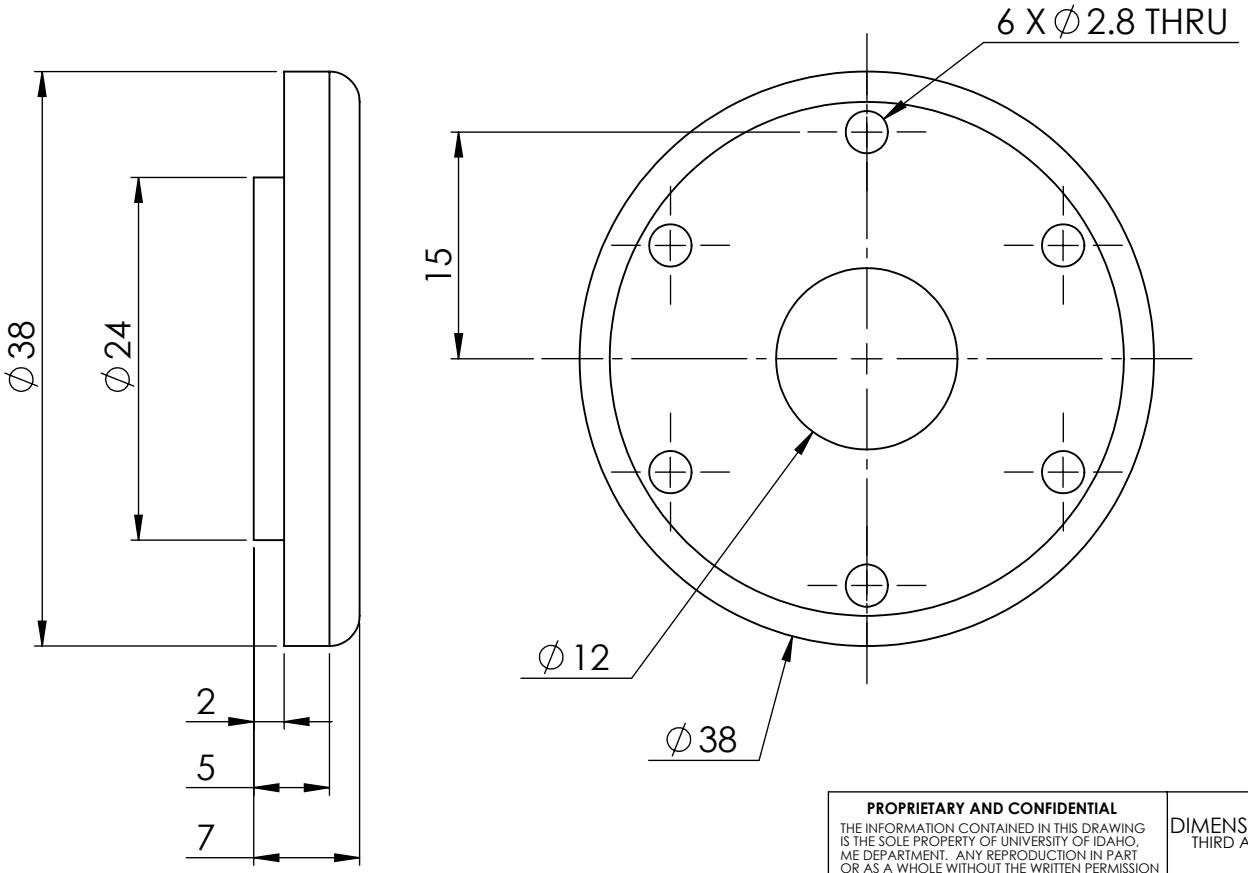

SolidWorks Student Edition.
For Academic Use Only.

PROPRIETARY AND CONFIDENTIAL
THE INFORMATION CONTAINED IN THIS DRAWING IS THE SOLE PROPERTY OF UNIVERSITY OF IDAHO, ME DEPARTMENT. ANY REPRODUCTION IN PART OR AS A WHOLE WITHOUT THE WRITTEN PERMISSION OF UNIVERSITY OF IDAHO, ME DEPARTMENT IS PROHIBITED.

DIMENSIONS ARE IN MILLIMETERS
THIRD ANGLE PROJECTION

MATERIAL: 6061-T6 (SS)

Fantastic Four: The Barr & Stroud Engine

DEFAULT TOLERANCES:

LINEAR:	ANGULAR:
X. ± .25	X. ± 2
X.X ± .1	X.X ± 1
X.XX ± .01	X.XX ± 0 30'
X.XXX ± .002	

DESCRIPTION:	Case Front Cover		
CHECKED BY:		DATE:	
DRAWN BY:	Brian Zaladonis	DATE:	12/8/2011
FILE NAME:	Case Front Cover (BZ).SLDPRT		

UNIVERSITY OF IDAHO
ME DEPARTMENT

PART #:	2-03	QTY:	1
SCALE:	2:1	SHEET:	15 OF 55

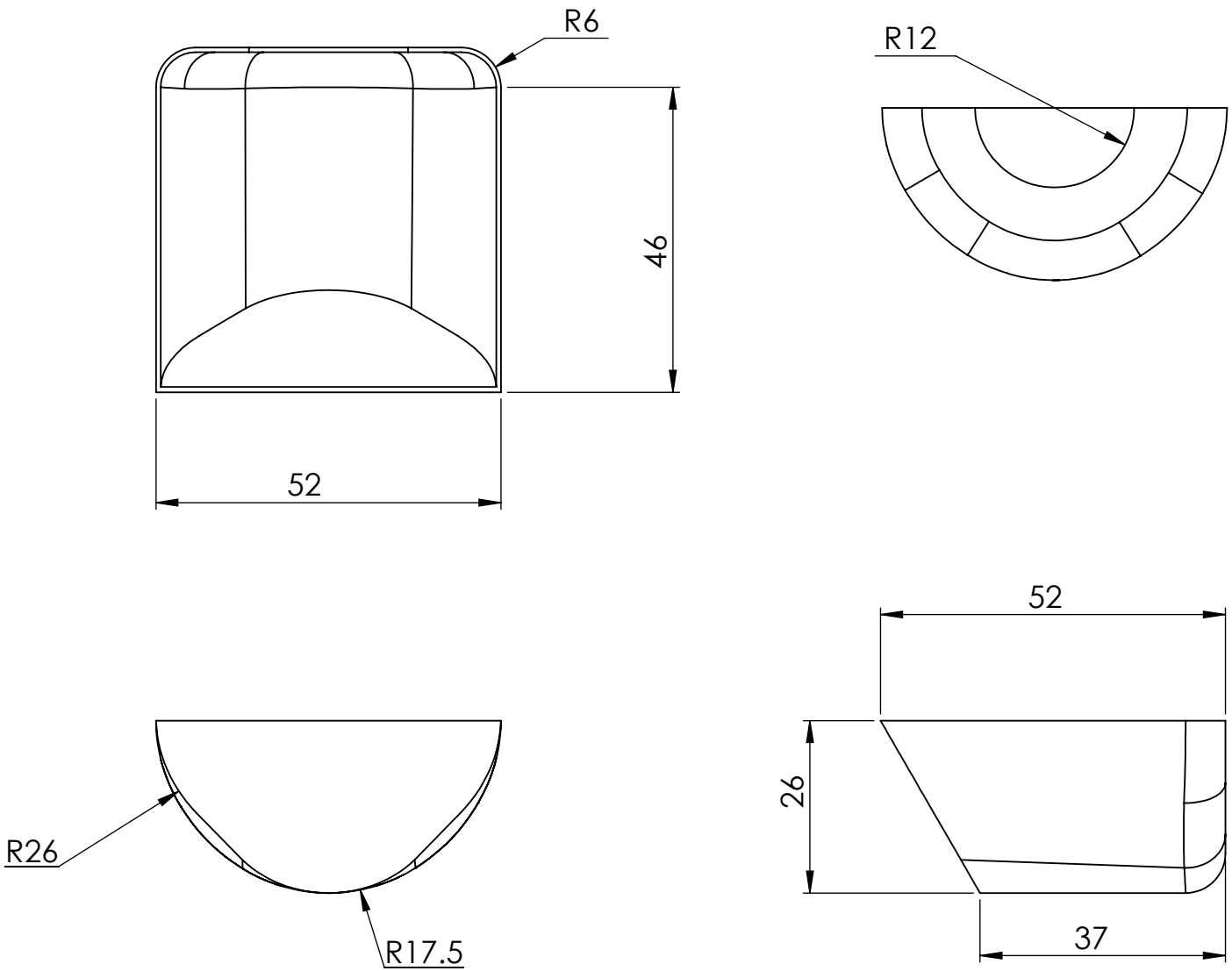

NOTE: Shell thickness is 0.7 mm
Radius of sump body is 26mm

SolidWorks Student Edition.
For Academic Use Only.

PROPRIETARY AND CONFIDENTIAL
THE INFORMATION CONTAINED IN THIS DRAWING IS THE SOLE PROPERTY OF UNIVERSITY OF IDAHO, ME DEPARTMENT. ANY REPRODUCTION IN PART OR AS A WHOLE WITHOUT THE WRITTEN PERMISSION OF UNIVERSITY OF IDAHO, ME DEPARTMENT IS PROHIBITED.

DIMENSIONS ARE IN MILLIMETERS
THIRD ANGLE PROJECTION

MATERIAL: 6061-T6 (SS)

Fantastic Four: The Barr & Stroud Engine

DEFAULT TOLERANCES:

LINEAR:	ANGULAR:
X. ± .25	X. ± 2
X.X ± .1	X.X ± 1
X.XX ± .01	X.XX ± 0 30'
X.XXX ± .002	

DESCRIPTION:	Sump		
CHECKED BY:		DATE:	
DRAWN BY:	Alex Ackerman	DATE:	11/27/2011
FILE NAME:	SUMP Aluminum sheet 1(AA).SLDPRT		

UNIVERSITY OF IDAHO
ME DEPARTMENT

PART #:	2-02	QTY:	1
SCALE:	1:1	SHEET:	14 OF 55

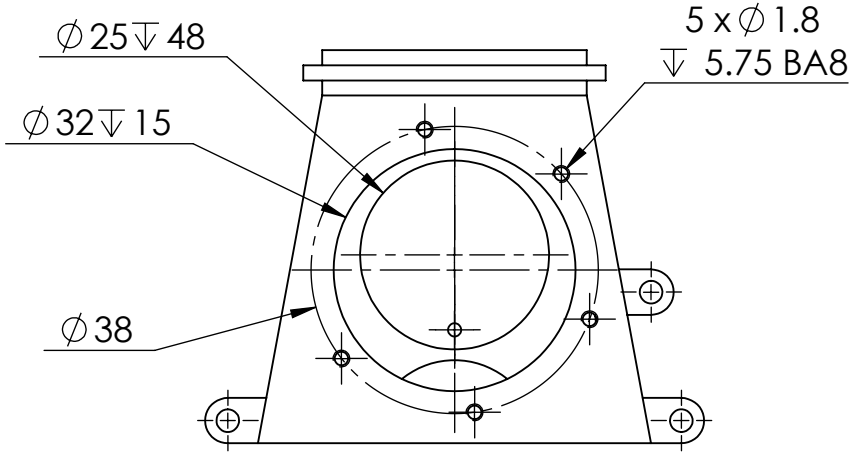

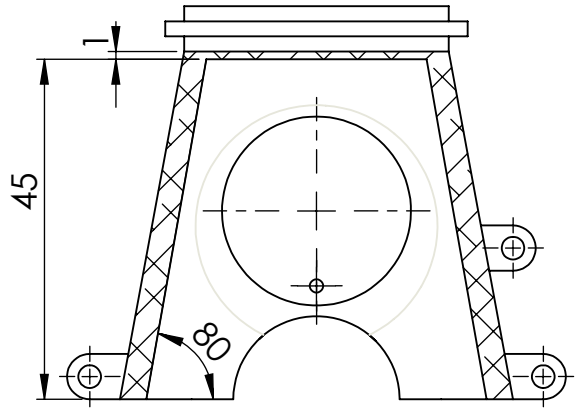

SECTION A-A

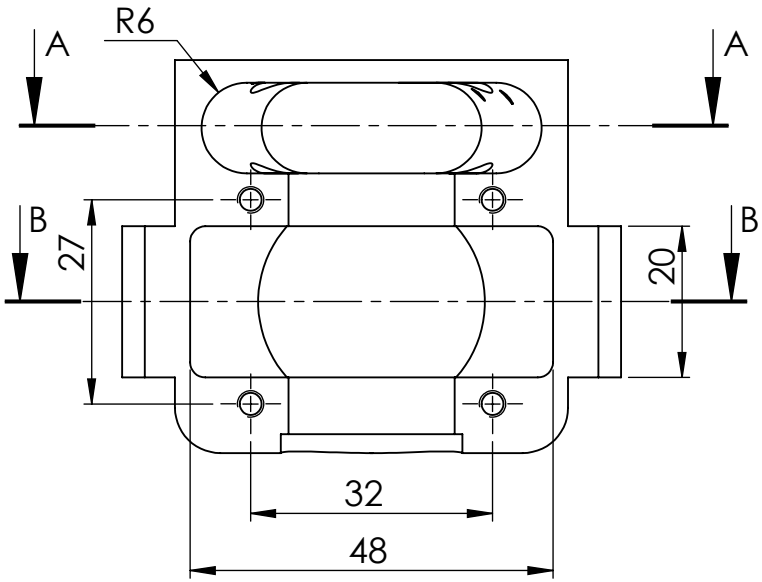

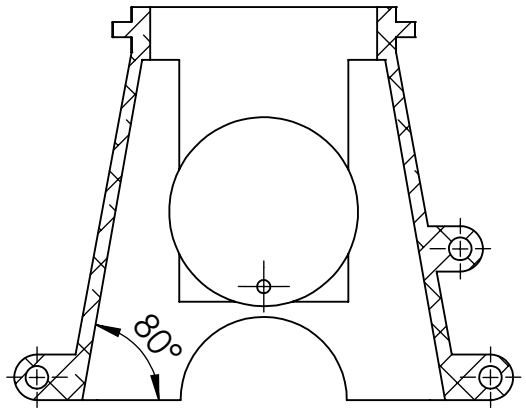

SECTION B-B

SolidWorks Student Edition.
For Academic Use Only.

PROPRIETARY AND CONFIDENTIAL THE INFORMATION CONTAINED IN THIS DRAWING IS THE SOLE PROPERTY OF UNIVERSITY OF IDAHO, ME DEPARTMENT. ANY REPRODUCTION IN PART OR AS A WHOLE WITHOUT THE WRITTEN PERMISSION OF UNIVERSITY OF IDAHO, ME DEPARTMENT IS PROHIBITED.	DIMENSIONS ARE IN MILLIMETERS THIRD ANGLE PROJECTION	Fantastic Four: The Barr & Stroud Engine
	MATERIAL: 6061-T6 (SS)	
DEFAULT TOLERANCES: LINEAR: X.±.25 X.X±.1 X.XX±.01 X.XXX±.002 ANGULAR: X.± 2 X.X± 1 X.XX± 0 30'	DESCRIPTION: Crank Case	**UNIVERSITY OF IDAHO ME DEPARTMENT**
	CHECKED BY: DATE:	
	DRAWN BY: Brian Zaladonis DATE: 12/4/2011	PART #: 2-01 QTY: 1
	FILE NAME: crank case (BZ).SLDPRT	SCALE: 1:1 SHEET: 13 OF 55

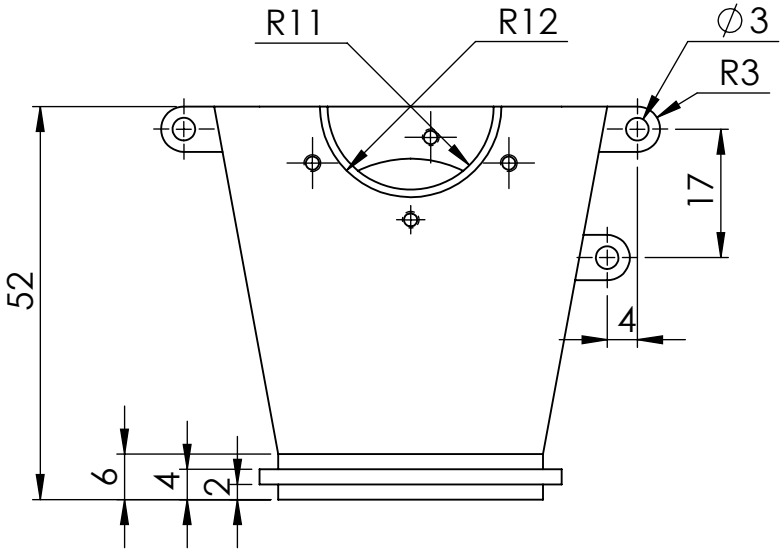

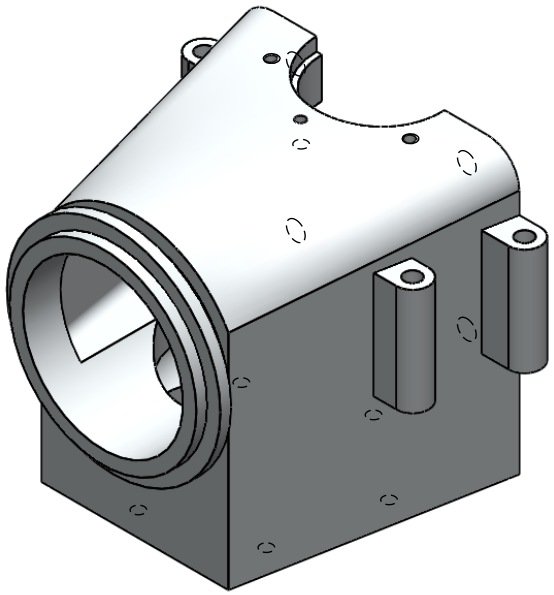

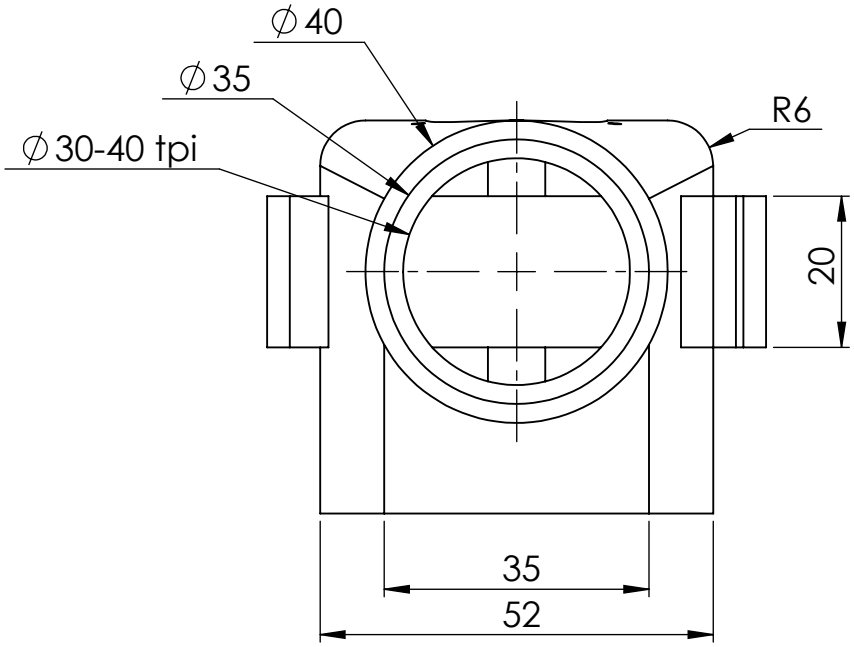

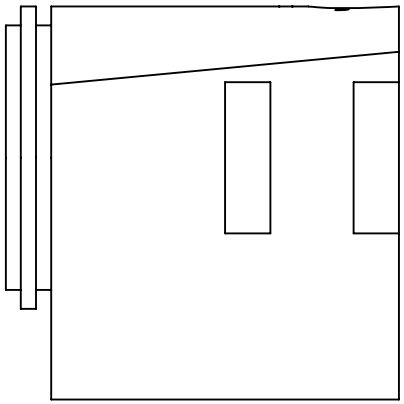

SolidWorks Student Edition.
For Academic Use Only.

PROPRIETARY AND CONFIDENTIAL THE INFORMATION CONTAINED IN THIS DRAWING IS THE SOLE PROPERTY OF UNIVERSITY OF IDAHO, ME DEPARTMENT. ANY REPRODUCTION IN PART OR AS A WHOLE WITHOUT THE WRITTEN PERMISSION OF UNIVERSITY OF IDAHO, ME DEPARTMENT IS PROHIBITED.	DIMENSIONS ARE IN MILLIMETERS THIRD ANGLE PROJECTION MATERIAL: 6061-T6 (SS)	Fantastic Four: The Barr & Stroud Engine
DEFAULT TOLERANCES: LINEAR: X. ± .25, X.X ± .1, X.XX ± .01, X.XXX ± .002 ANGULAR: X. ± 2, X.X ± 1, X.XX ± 0 30'	DESCRIPTION: Crank Case CHECKED BY: DATE: DRAWN BY: Brian Zaladonis DATE: 12/4/2011 FILE NAME: crank case (BZ).SLDPRT	**UNIVERSITY OF IDAHO ME DEPARTMENT** PART #: 2-01 QTY: 1 SCALE: 1:1 SHEET: 12 OF 55

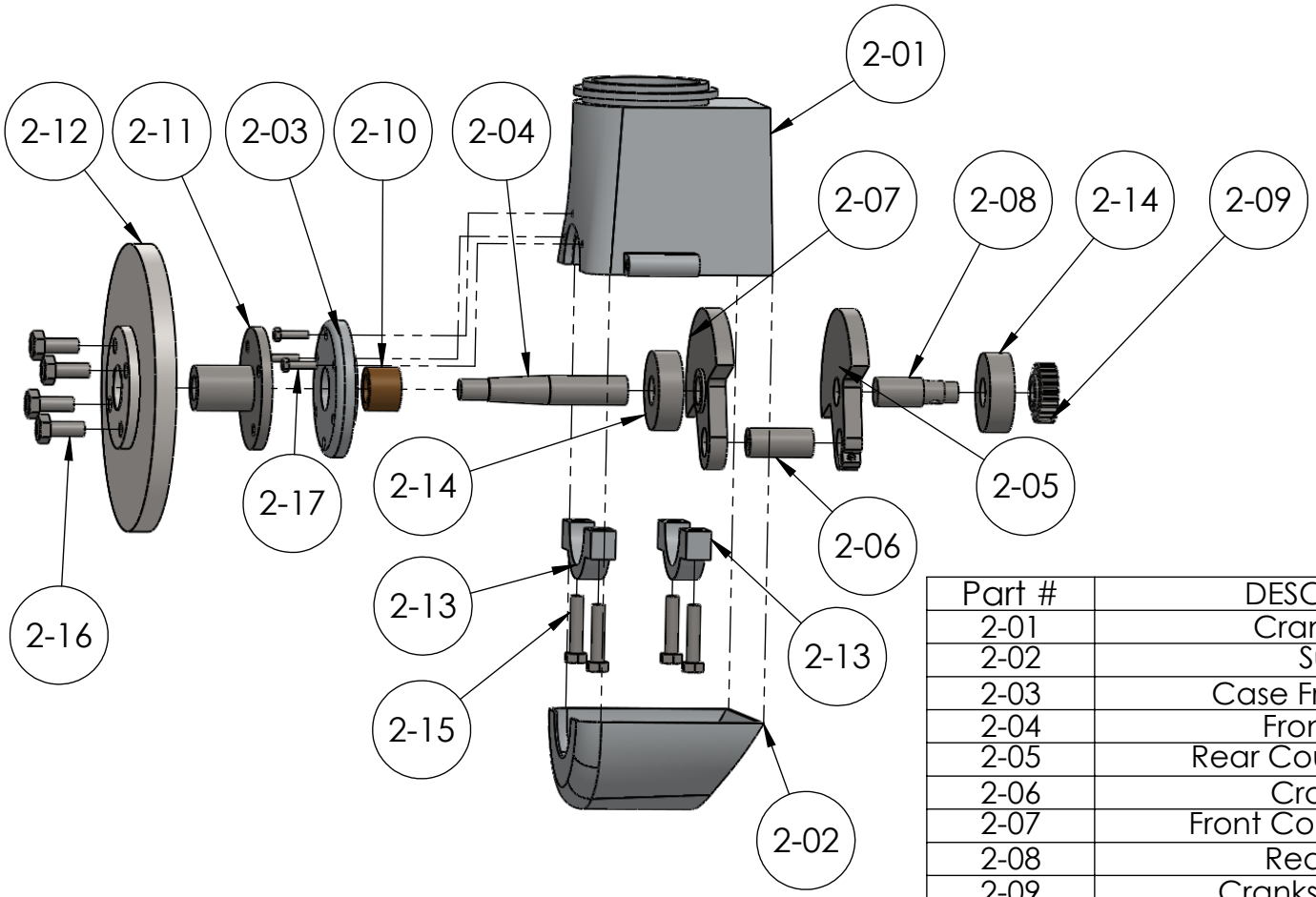

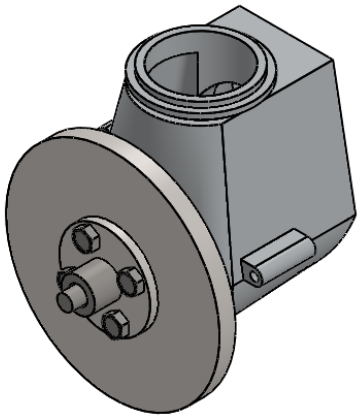

Part #	DESCRIPTION	QTY.	SHEET #
2-01	Crank Case	1	12,13
2-02	Sump	1	14
2-03	Case Front Cover	1	15
2-04	Front Shaft	1	16
2-05	Rear Counterweight	1	17
2-06	Crank Pin	1	18
2-07	Front Counterweight	1	19
2-08	Rear Shaft	1	20
2-09	Crankshaft Gear	1	21
2-10	Bronze Bushing	1	22
2-11	Flywheel Hub	1	23
2-12	Flywheel	1	24
2-13	Main Bearing Cap	2	25
2-14	Ballrace 22x8x7	2	-
2-15	HHMS M3.5x0.6x16	4	-
2-16	HHMS 4x0.7x10	4	-
2-17	HHMS M2.2x0.6x8	3	-

NOTE: Sump is tack-welded onto the crankcase and the crankcase front cover

PROPRIETARY AND CONFIDENTIAL
THE INFORMATION CONTAINED IN THIS DRAWING IS THE SOLE PROPERTY OF UNIVERSITY OF IDAHO, ME DEPARTMENT. ANY REPRODUCTION IN PART OR AS A WHOLE WITHOUT THE WRITTEN PERMISSION OF UNIVERSITY OF IDAHO, ME DEPARTMENT IS PROHIBITED.

DIMENSIONS ARE IN MILLIMETERS
THIRD ANGLE PROJECTION

MATERIAL: Assorted

Fantastic Four: The Barr & Stroud Engine

DEFAULT TOLERANCES:
LINEAR: X. ± .25, X.X ± .1, X.XX ± .01, X.XXX ± .002
ANGULAR: X. ± 2, X.X ± 1, X.XX ± 0 30'

DESCRIPTION: Crankshaft-Crankcase Assembly
CHECKED BY: DATE:
DRAWN BY: Phillip Spinden DATE: 12/8/2011
FILE NAME: Crankshaft-Crankcase (PS).SLDPRT

UNIVERSITY OF IDAHO ME DEPARTMENT

PART #: 2-00 QTY: 1
SCALE: 1:2 SHEET: 11 OF 55

SolidWorks Student Edition.
For Academic Use Only.

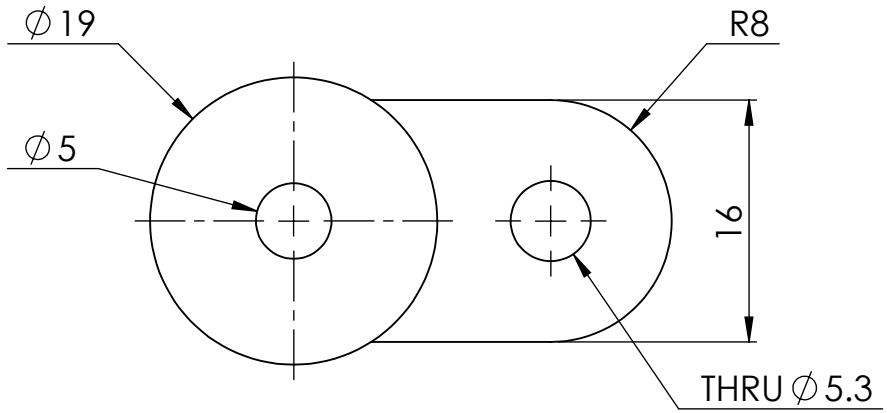

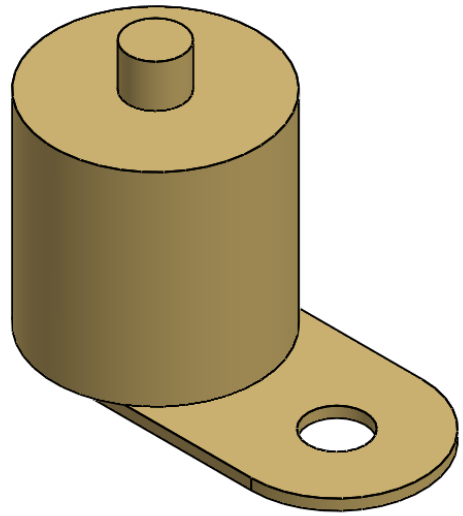

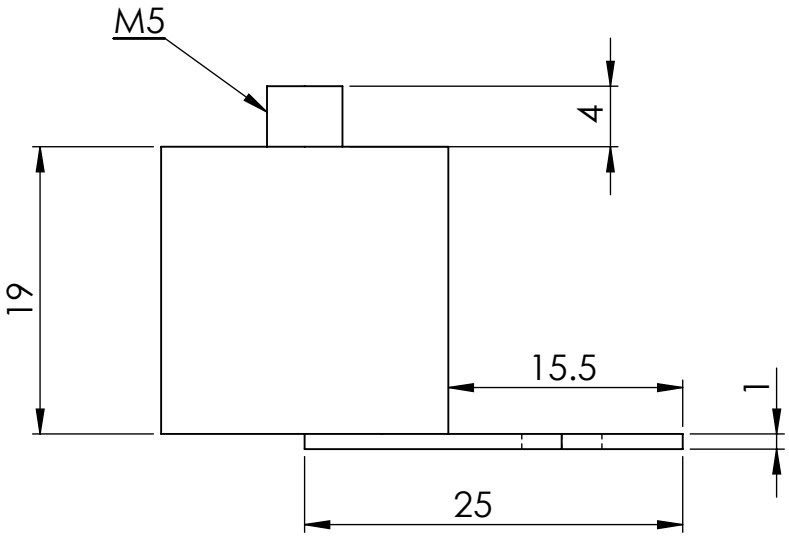

NOTE: The Float Chamber is a dummy and is optional

SolidWorks Student Edition.
For Academic Use Only.

PROPRIETARY AND CONFIDENTIAL
THE INFORMATION CONTAINED IN THIS DRAWING IS THE SOLE PROPERTY OF UNIVERSITY OF IDAHO, ME DEPARTMENT. ANY REPRODUCTION IN PART OR AS A WHOLE WITHOUT THE WRITTEN PERMISSION OF UNIVERSITY OF IDAHO, ME DEPARTMENT IS PROHIBITED.

DIMENSIONS ARE IN MILLIMETERS
THIRD ANGLE PROJECTION

MATERIAL: Brass

Fantastic Four: The Barr & Stroud Engine

DEFAULT TOLERANCES:
LINEAR: X. ± .25, X.X ± .1, X.XX ± .01, X.XXX ± .002
ANGULAR: X. ± 2, X.X ± 1, X.XX ± 0 30'

DESCRIPTION: Float Chamber
CHECKED BY: DATE:
DRAWN BY: Alex Ackerman DATE: 12/8/2011
FILE NAME: FLOAT CHAMBER Brass 1(AA).SLDPRT

UNIVERSITY OF IDAHO
ME DEPARTMENT

PART #: 1-07 QTY: 1
SCALE: 2:1 SHEET: 10 OF 55

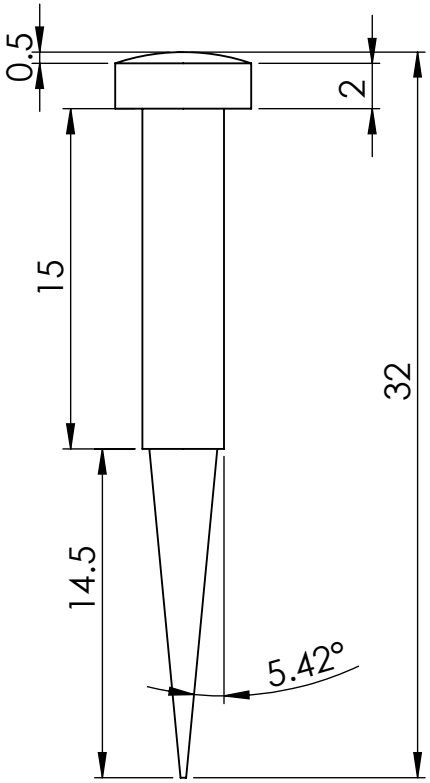

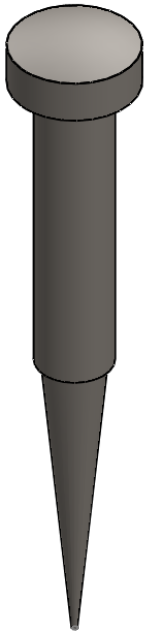

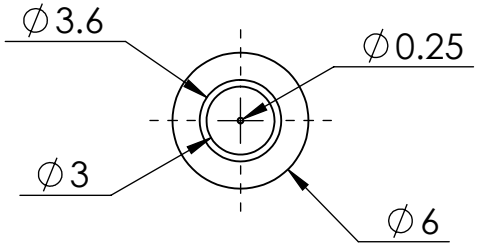

SolidWorks Student Edition.
For Academic Use Only.

PROPRIETARY AND CONFIDENTIAL
THE INFORMATION CONTAINED IN THIS DRAWING IS THE SOLE PROPERTY OF UNIVERSITY OF IDAHO, ME DEPARTMENT. ANY REPRODUCTION IN PART OR AS A WHOLE WITHOUT THE WRITTEN PERMISSION OF UNIVERSITY OF IDAHO, ME DEPARTMENT IS PROHIBITED.

DIMENSIONS ARE IN MILLIMETERS
THIRD ANGLE PROJECTION

MATERIAL: Mild Steel

Fantastic Four: The Barr & Stroud Engine

UNIVERSITY OF IDAHO
ME DEPARTMENT

DEFAULT TOLERANCES:

LINEAR:	ANGULAR:
X. ± .25	X. ± 2
X.X ± .1	X.X ± 1
X.XX ± .01	X.XX ± 0 30'
X.XXX ± .002	

DESCRIPTION:	Needle Valve		
CHECKED BY:		DATE:	
DRAWN BY:	Alex Ackerman	DATE:	12/8/2011
FILE NAME:	NEEDLE VALVE midl steel 1(AA).SLDPRT		

PART #: 1-06	QTY: 1
SCALE: 3:1	SHEET: 9 OF 55

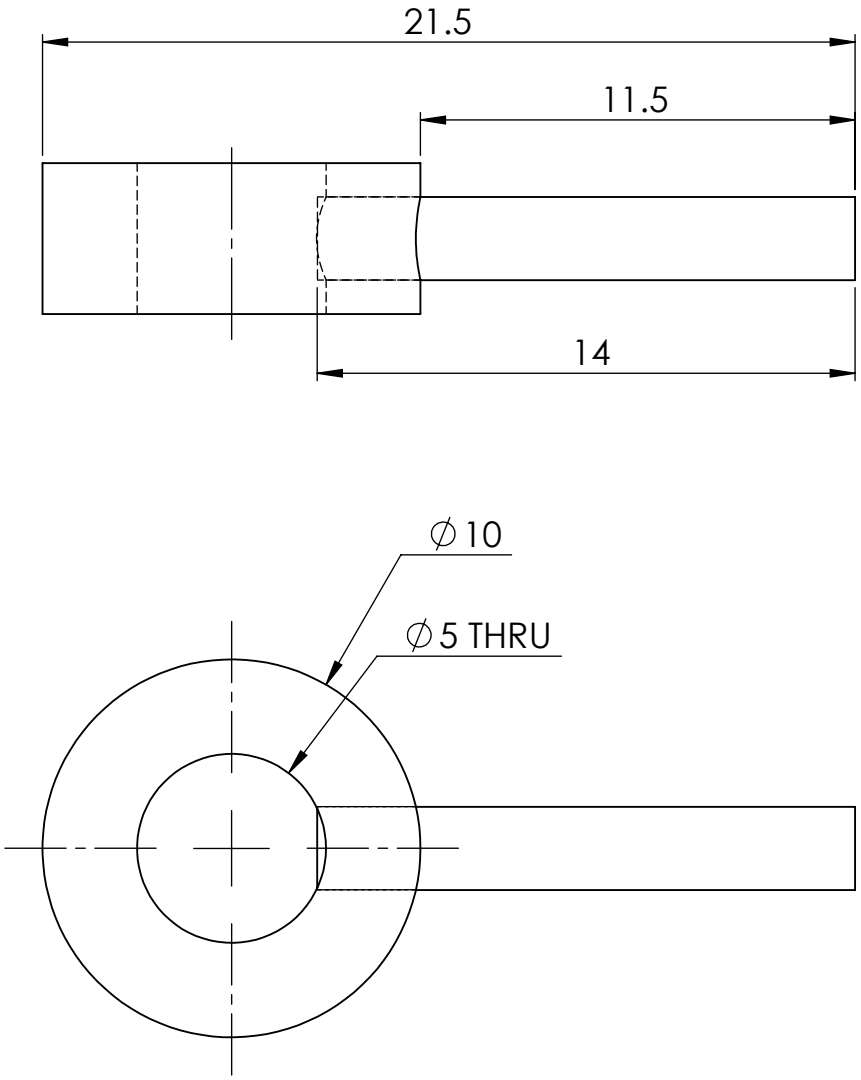

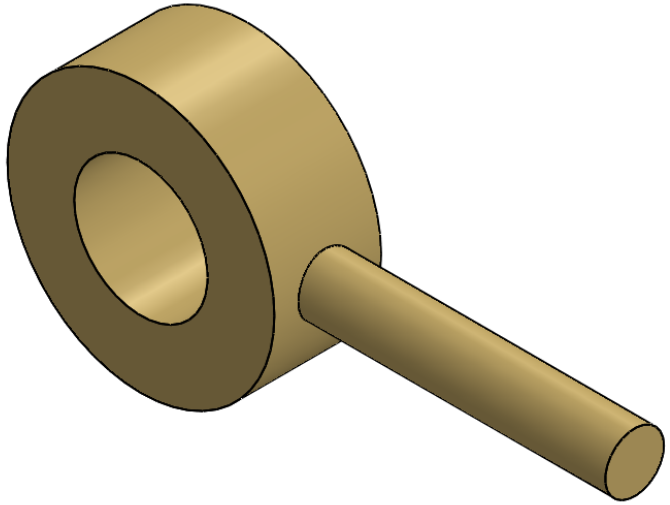

SolidWorks Student Edition.
For Academic Use Only.

PROPRIETARY AND CONFIDENTIAL THE INFORMATION CONTAINED IN THIS DRAWING IS THE SOLE PROPERTY OF UNIVERSITY OF IDAHO, ME DEPARTMENT. ANY REPRODUCTION IN PART OR AS A WHOLE WITHOUT THE WRITTEN PERMISSION OF UNIVERSITY OF IDAHO, ME DEPARTMENT IS PROHIBITED.	DIMENSIONS ARE IN MILLIMETERS THIRD ANGLE PROJECTION MATERIAL: Brass	Fantastic Four: The Barr & Stroud Engine
DEFAULT TOLERANCES: LINEAR: X. ± .25, X.X ± .1, X.XX ± .01, X.XXX ± .002 ANGULAR: X. ± 2, X.X ± 1, X.XX ± 0 30'	DESCRIPTION: Throttle Lever CHECKED BY: DATE: DRAWN BY: Alex Ackerman DATE: 12/8/2011 FILE NAME: LEVER, Throttle Material brass 1(AA).SLDPRT	**UNIVERSITY OF IDAHO ME DEPARTMENT** PART #: 1-05 QTY: 1 SCALE: 5:1 SHEET: 8 OF 55

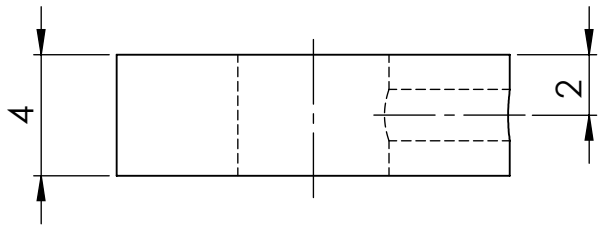

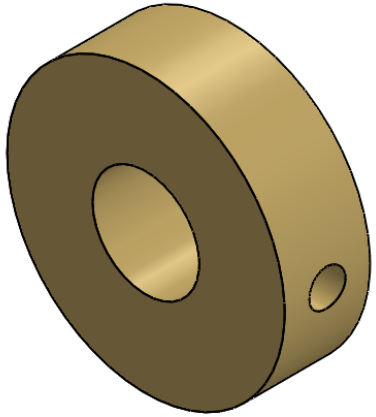

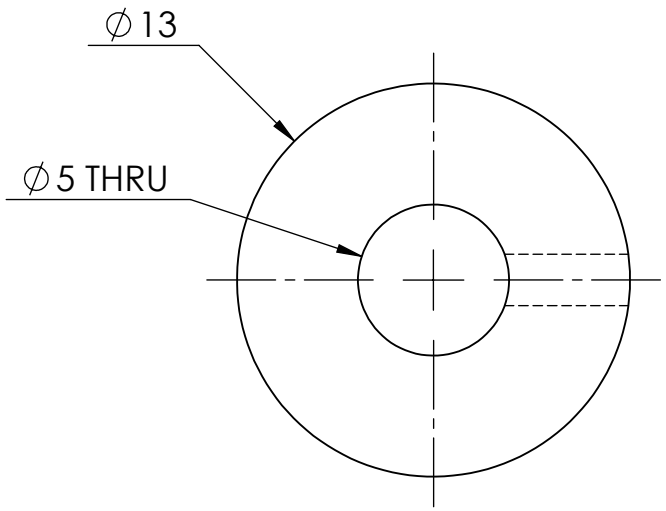

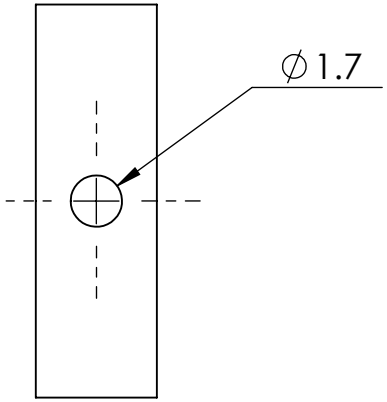

SolidWorks Student Edition.
For Academic Use Only.

PROPRIETARY AND CONFIDENTIAL THE INFORMATION CONTAINED IN THIS DRAWING IS THE SOLE PROPERTY OF UNIVERSITY OF IDAHO, ME DEPARTMENT. ANY REPRODUCTION IN PART OR AS A WHOLE WITHOUT THE WRITTEN PERMISSION OF UNIVERSITY OF IDAHO, ME DEPARTMENT IS PROHIBITED.	DIMENSIONS ARE IN MILLIMETERS THIRD ANGLE PROJECTION		Fantastic Four: The Barr & Stroud Engine
	MATERIAL: Brass		
DEFAULT TOLERANCES: LINEAR: X.±.25 X.X±.1 X.XX±.01 X.XXX±.002 ANGULAR: X.± 2 X.X± 1 X.XX± 0 30'	DESCRIPTION: Top Cover		**UNIVERSITY OF IDAHO ME DEPARTMENT**
	CHECKED BY:	DATE:	
	DRAWN BY: Alex Ackerman	DATE: 12/8/2011	PART #: 1-04 QTY: 1
	FILE NAME: COVER, Top Material brass 1(AA).SLDPRT		SCALE: 4:1 SHEET: 7 OF 55

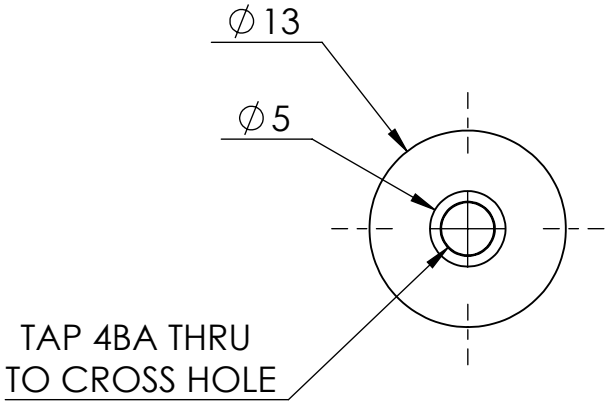

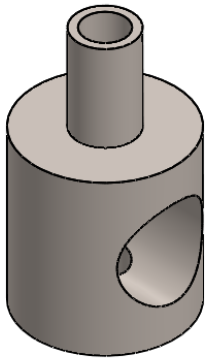

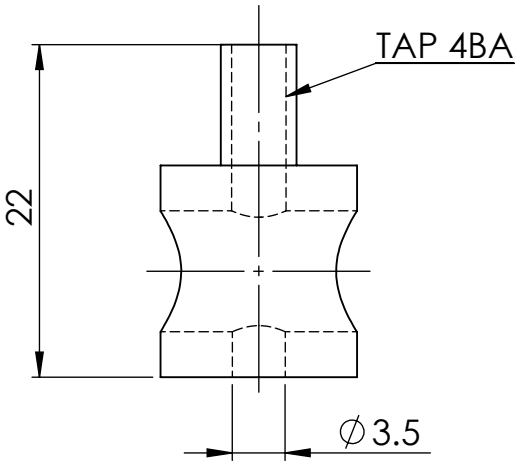

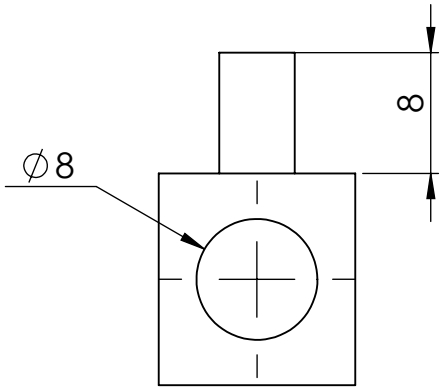

SolidWorks Student Edition.
For Academic Use Only.

PROPRIETARY AND CONFIDENTIAL THE INFORMATION CONTAINED IN THIS DRAWING IS THE SOLE PROPERTY OF UNIVERSITY OF IDAHO, ME DEPARTMENT. ANY REPRODUCTION IN PART OR AS A WHOLE WITHOUT THE WRITTEN PERMISSION OF UNIVERSITY OF IDAHO, ME DEPARTMENT IS PROHIBITED.	DIMENSIONS ARE IN MILLIMETERS THIRD ANGLE PROJECTION	Fantastic Four: The Barr & Stroud Engine
	MATERIAL: Plain Carbon Steel	
DEFAULT TOLERANCES: LINEAR: X.±.25 X.X±.1 X.XX±.01 X.XXX±.002 ANGULAR: X.± 2 X.X± 1 X.XX± 0 30'	DESCRIPTION: BARREL, Throttle	**UNIVERSITY OF IDAHO ME DEPARTMENT**
	CHECKED BY: DATE:	
	DRAWN BY: Alex Ackerman DATE: 11/27/2011	PART #: 1-03 QTY: 1
	FILE NAME: BARREL, Throttle Mild Steel 1(AA).SLDPRT	SCALE: 2:1 SHEET: 6 OF 55

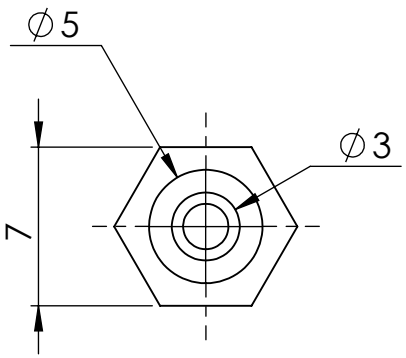

TOP VIEW

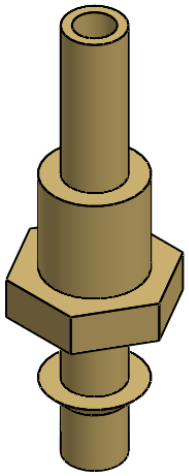

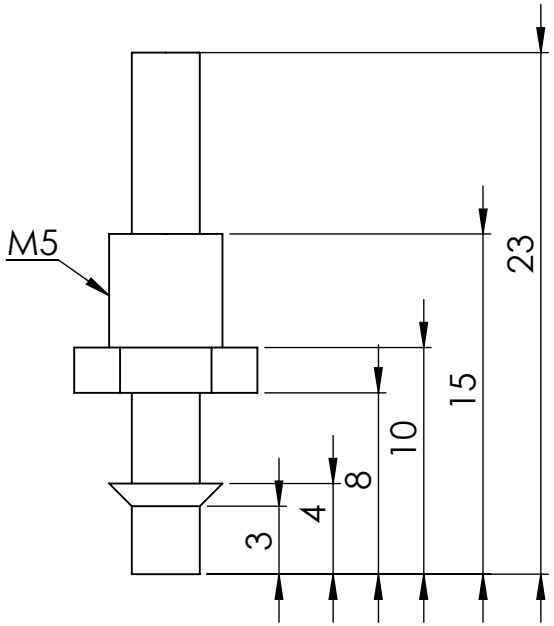

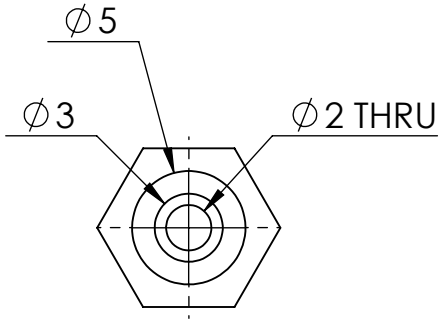

BOTTOM VIEW

SolidWorks Student Edition.
For Academic Use Only.

PROPRIETARY AND CONFIDENTIAL THE INFORMATION CONTAINED IN THIS DRAWING IS THE SOLE PROPERTY OF UNIVERSITY OF IDAHO, ME DEPARTMENT. ANY REPRODUCTION IN PART OR AS A WHOLE WITHOUT THE WRITTEN PERMISSION OF UNIVERSITY OF IDAHO, ME DEPARTMENT IS PROHIBITED.	DIMENSIONS ARE IN MILLIMETERS THIRD ANGLE PROJECTION		Fantastic Four: The Barr & Stroud Engine
	MATERIAL: Brass		
DEFAULT TOLERANCES: LINEAR: X.±.25 X.X±.1 X.XX±.01 X.XXX±.002 ANGULAR: X.± 2 X.X± 1 X.XX± 0 30'	DESCRIPTION: Pipe, Fuel Inlet		**UNIVERSITY OF IDAHO ME DEPARTMENT**
	CHECKED BY:	DATE:	
	DRAWN BY: Alex Ackerman	DATE: 12/8/2011	PART #: 1-02 QTY: 1
	FILE NAME: PIPE, Fuel inlet brass 1(AA).SLDPRT		SCALE: 3:1 SHEET: 5 OF 55

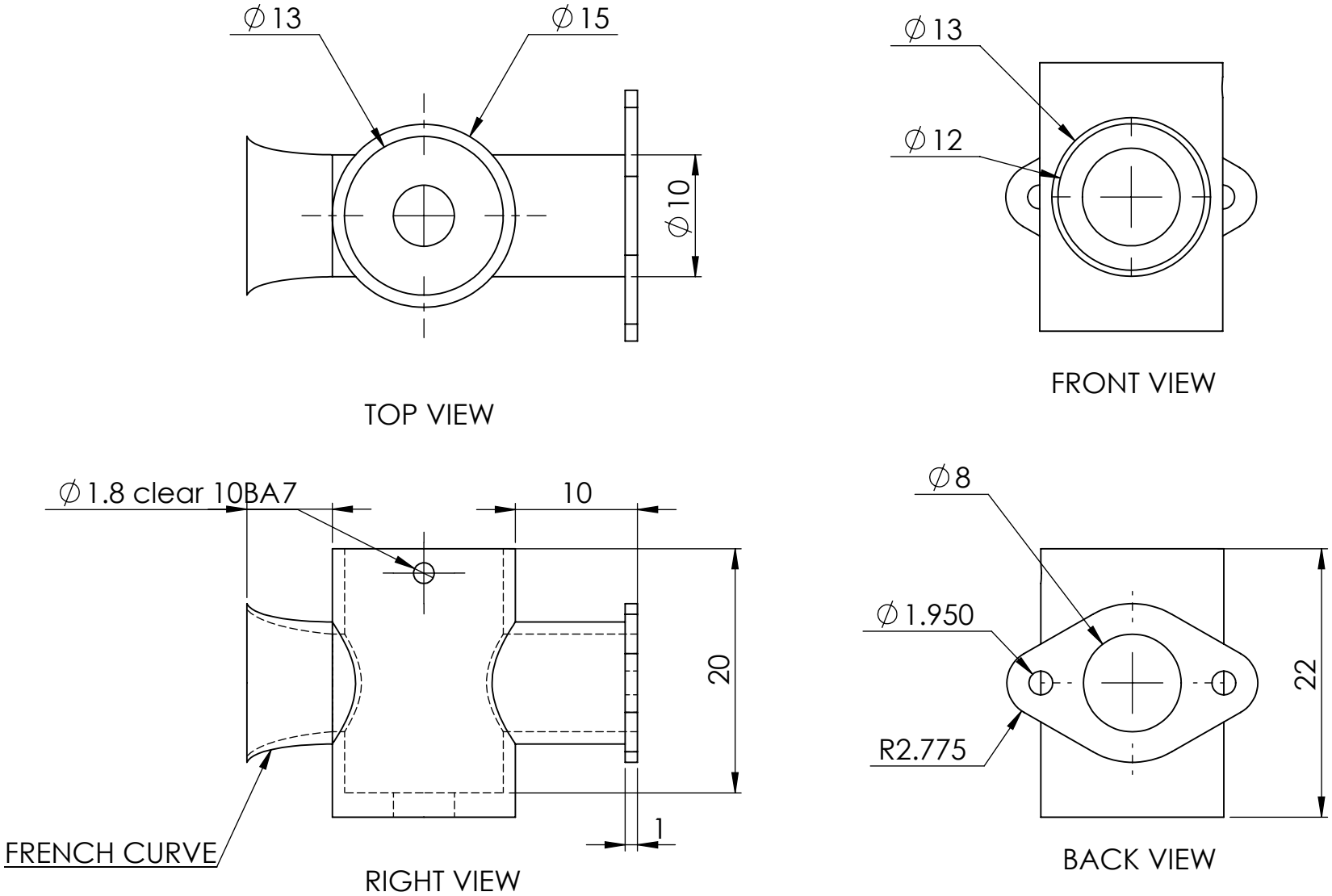

SolidWorks Student Edition.
For Academic Use Only.

PROPRIETARY AND CONFIDENTIAL
THE INFORMATION CONTAINED IN THIS DRAWING IS THE SOLE PROPERTY OF UNIVERSITY OF IDAHO, ME DEPARTMENT. ANY REPRODUCTION IN PART OR AS A WHOLE WITHOUT THE WRITTEN PERMISSION OF UNIVERSITY OF IDAHO, ME DEPARTMENT IS PROHIBITED.

DIMENSIONS ARE IN MILLIMETERS
THIRD ANGLE PROJECTION

MATERIAL: Brass

Fantastic Four: The Barr & Stroud Engine

UNIVERSITY OF IDAHO
ME DEPARTMENT

DEFAULT TOLERANCES:

LINEAR:	ANGULAR:
X. ± .25	X. ± 2
X.X ± .1	X.X ± 1
X.XX ± .01	X.XX ± 0 30'
X.XXX ± .002	

DESCRIPTION:	Carburetor Body		
CHECKED BY:		DATE:	
DRAWN BY:	Alex Ackerman	DATE:	12/8/2011
FILE NAME:	CARBURETOR BODY Brass 1(AA).SLDPRT		

PART #:	1-01	QTY:	1
SCALE:	2:1	SHEET:	4 OF 55

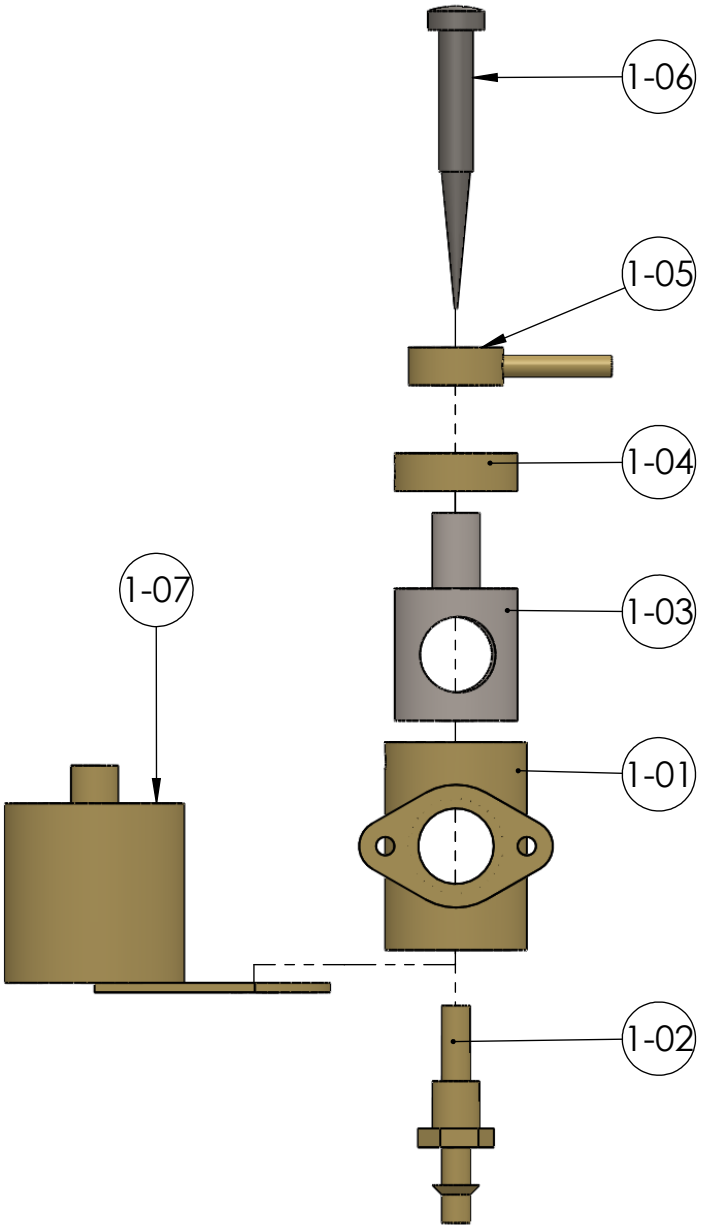

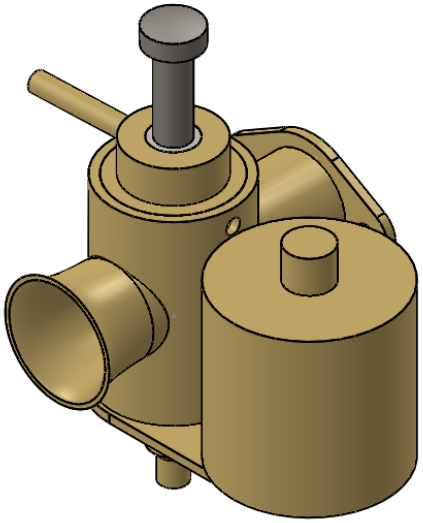

Part #	DESCRIPTION	QTY.	Sheet #
1-01	Carburetor Body	1	4
1-02	Pipe, Fuel Inlet	1	5
1-03	BARREL, Throttle	1	6
1-04	Top Cover	1	7
1-05	Throttle Lever	1	8
1-06	Needle Valve	1	9
1-07	Float Chamber	1	10

PROPRIETARY AND CONFIDENTIAL
THE INFORMATION CONTAINED IN THIS DRAWING IS THE SOLE PROPERTY OF UNIVERSITY OF IDAHO, ME DEPARTMENT. ANY REPRODUCTION IN PART OR AS A WHOLE WITHOUT THE WRITTEN PERMISSION OF UNIVERSITY OF IDAHO, ME DEPARTMENT IS PROHIBITED.

DIMENSIONS ARE IN MILLIMETERS
THIRD ANGLE PROJECTION

MATERIAL: Assorted

Fantastic Four: The Barr & Stroud Engine

DEFAULT TOLERANCES:
LINEAR: X. ± .25, X.X ± .1, X.XX ± .01, X.XXX ± .002
ANGULAR: X. ± 2, X.X ± 1, X.XX ± 0 30'

DESCRIPTION: Carburetor Assembly
CHECKED BY: DATE:
DRAWN BY: Alex Ackerman DATE: 12/8/2011
FILE NAME: Carburetor assembly complete.SLDPRT

UNIVERSITY OF IDAHO ME DEPARTMENT

PART #: 1-00 QTY: 1
SCALE: 1.5:1 SHEET: 3 OF 55

SolidWorks Student Edition.
For Academic Use Only.

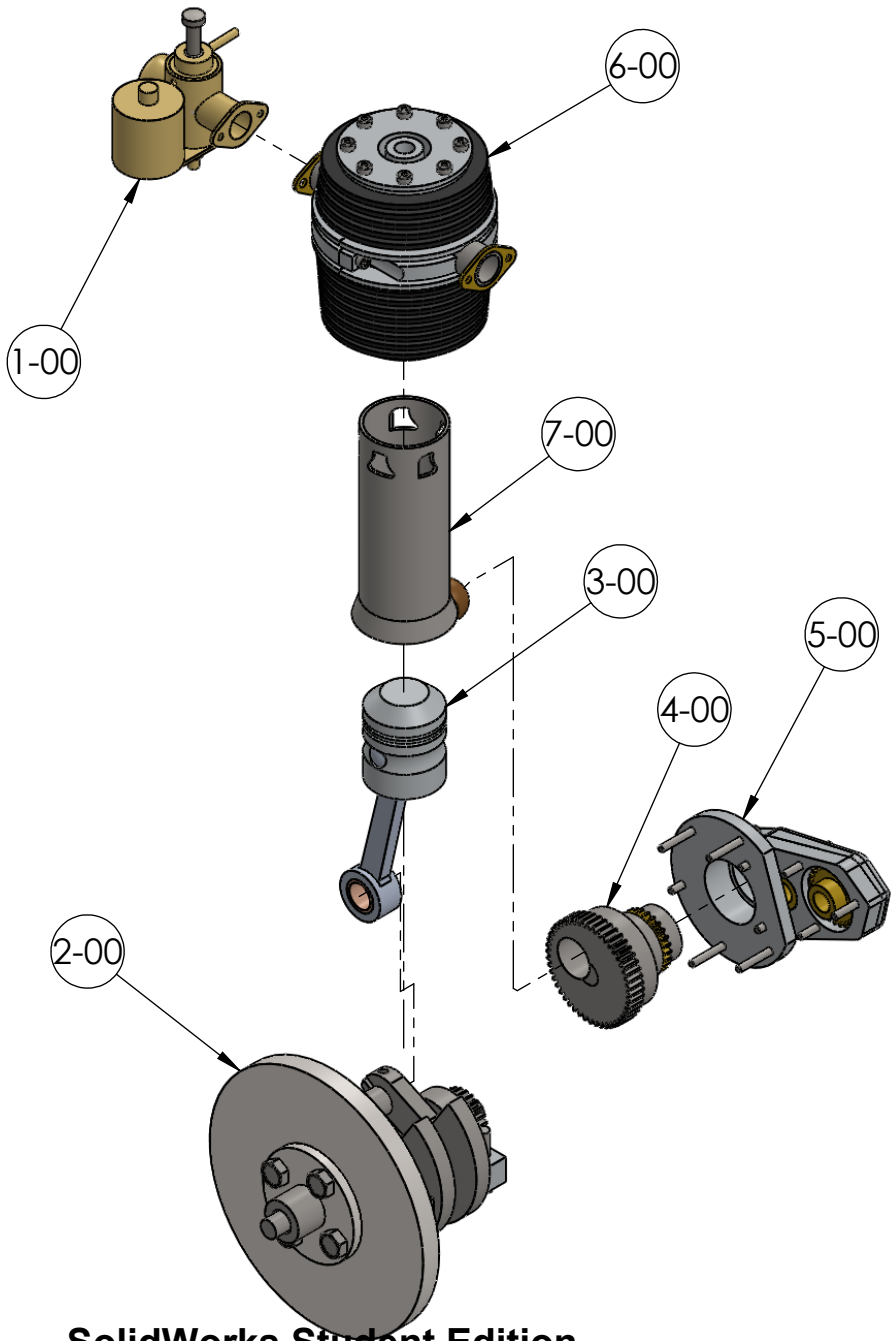

NOTE: Crank Case and Sump not shown for orientation clarity. These parts are shown in the renderings.

All purchased part are indicated by a (-)in the Sheet # column

Part #	DESCRIPTION	QTY.	Sheet #
1-00	Carburetor Assembly	1	3
2-00	Crankshaft-Crankcase Assembly	1	11
3-00	Piston Connecting Rod Assembly	1	26
4-00	Gear Shaft Assembly	1	32
5-00	Gear Box Assembly	1	36
6-00	Cylinder Manifolds Assembly	1	43
7-00	Sleeve, Cam Assembly	1	51

PROPRIETARY AND CONFIDENTIAL
THE INFORMATION CONTAINED IN THIS DRAWING IS THE SOLE PROPERTY OF UNIVERSITY OF IDAHO, ME DEPARTMENT. ANY REPRODUCTION IN PART OR AS A WHOLE WITHOUT THE WRITTEN PERMISSION OF UNIVERSITY OF IDAHO, ME DEPARTMENT IS PROHIBITED.

DIMENSIONS ARE IN MILLIMETERS
THIRD ANGLE PROJECTION

MATERIAL: Assorted

Fantastic Four: The Barr & Stroud Engine

DEFAULT TOLERANCES:
LINEAR: X. ± .25, X.X ± .1, X.XX ± .01, X.XXX ± .002
ANGULAR: X. ± 2, X.X ± 1, X.XX ± 0 30'

DESCRIPTION: Final Assembly
CHECKED BY: DATE:
DRAWN BY: Fantastic Four DATE: 12/9/2011
FILE NAME: Motor Exploded.SLDPRT

UNIVERSITY OF IDAHO ME DEPARTMENT
PART #: 0-00 QTY: 1
SCALE: 1:2 SHEET: 2 OF 55

SolidWorks Student Edition.
For Academic Use Only.

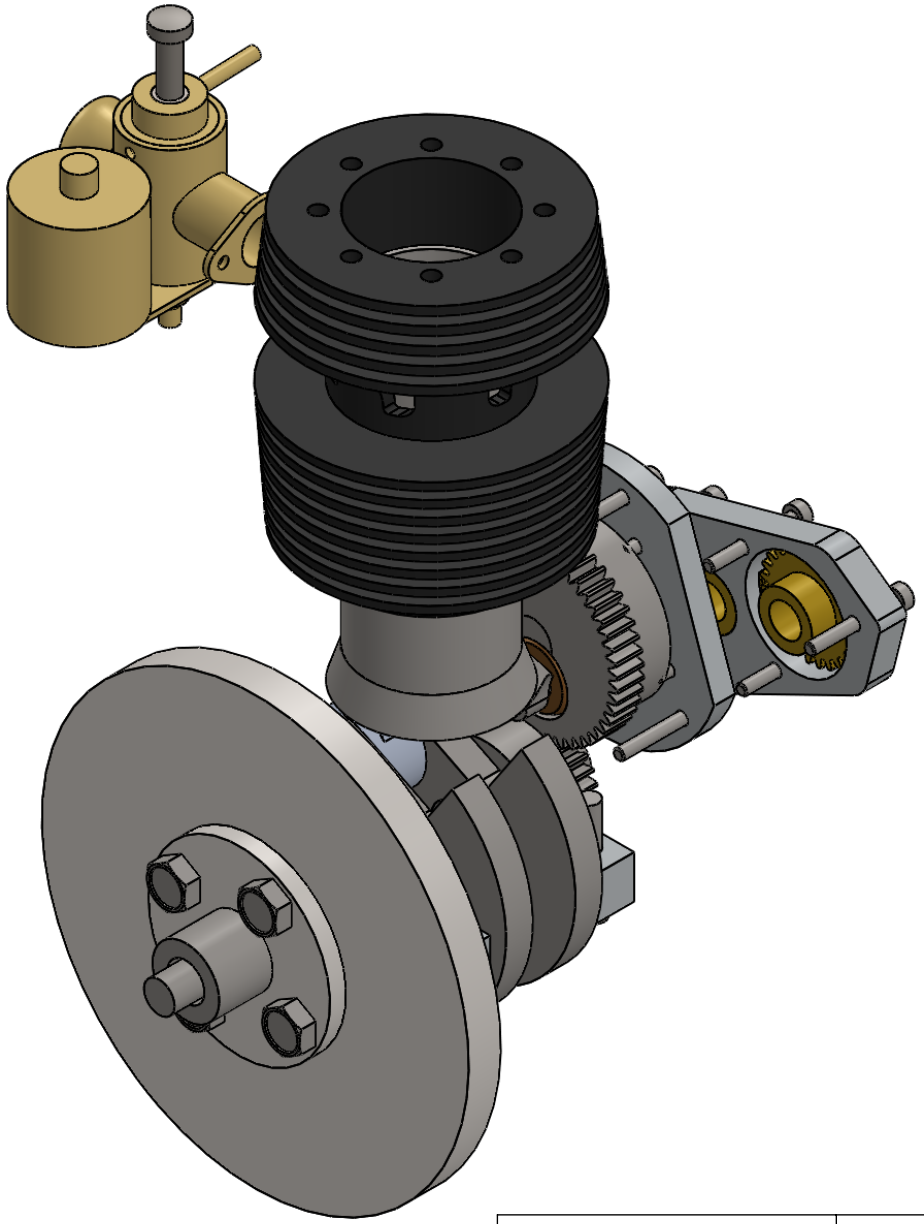

SolidWorks Student Edition.
For Academic Use Only.

PROPRIETARY AND CONFIDENTIAL
THE INFORMATION CONTAINED IN THIS DRAWING IS THE SOLE PROPERTY OF UNIVERSITY OF IDAHO, ME DEPARTMENT. ANY REPRODUCTION IN PART OR AS A WHOLE WITHOUT THE WRITTEN PERMISSION OF UNIVERSITY OF IDAHO, ME DEPARTMENT IS PROHIBITED.

DIMENSIONS ARE IN MILLIMETERS
THIRD ANGLE PROJECTION

MATERIAL: Assorted

Fantastic Four: The Barr & Stroud Engine

UNIVERSITY OF IDAHO
ME DEPARTMENT

DEFAULT TOLERANCES:

LINEAR:	ANGULAR:
X. ± .25	X. ± 2
X.X ± .1	X.X ± 1
X.XX ± .01	X.XX ± 0 30'
X.XXX ± .002	

DESCRIPTION:	Final Assembly		
CHECKED BY:		DATE:	
DRAWN BY:	Fantastic Four	DATE:	12/9/2011
FILE NAME:	Motor.SLDPRT		

PART #: 0-00	QTY: 1
SCALE: 1:1	SHEET: 1 OF 55